PIONEER®
The Art of Entertainment

Service Manual

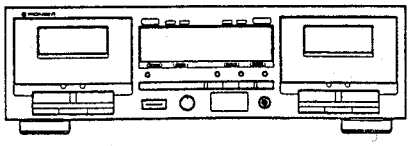

ORDER NO.
ARP2548

STEREO DOUBLE CASSETTE DECK

CT-W601R

CT-W601R HAS THE FOLLOWING:

Type	Power Requirement	Remarks
KUC	AC120V only	
KUC/CA	AC120V only	
HEM	AC220 – 230V, 230 – 240V (Switchable) *	
HB	AC220 – 230V, 230 – 240V (Switchable) *	
SD	AC110V, 120 – 127V, 220V, 240V (Switchable)	

* Change the connection of the power transformer's primary wiring.

- **This manual is applicable to CT-W601R/KUC, KUC/CA, HEM, HB and SD.**
- **For HEM, HB and SD types, refer to page 42.**
- **Ce manuel pour le service comprend les explications de réglage en français.**
- **Este manual de servicio trata del método ajuste escrito en español.**
- **KUC/CA type is identical to KUC type with French instruction manual. For all information except for the instruction, refer to KUC type.**

CONTENTS

1. SAFETY INFORMATION ····· 2
2. PACKING AND PARTS LIST ····· 3
3. EXPLODED VIEWS AND PARTS LIST ····· 4
4. BLOCK DIAGRAM ····· 13
5. SCHEMATIC DIAGRAM ····· 14
6. PCB CONNECTIONS DIAGRAM ····· 17
7. PCB PARTS LIST ····· 25
8. ADJUSTMENTS ····· 29
8. REGLAGES ····· 33
8. AJUSTES ····· 37
9. FL INFORMATION ····· 41
10. FOR HEM, HB AND SD TYPES ····· 42
11. PANEL FACILITIES ····· 44
12. SPECIFICATIONS ····· 45

PIONEER ELECTRONIC CORPORATION 4-1, Meguro 1-Chome, Meguro-ku, Tokyo 153, Japan
PIONEER ELECTRONICS SERVICE INC. P.O. Box 1760, Long Beach, California 90801 U.S.A.
PIONEER ELECTRONICS OF CANADA, INC. 300 Allstate Parkway Markham, Ontario L3R 0P2 Canada
PIONEER ELECTRONIC [EUROPE] N.V. Haven 1087 Keetberglaan 1, 9120 Melsele, Belgium
PIONEER ELECTRONICS AUSTRALIA PTY. LTD. 178-184 Boundary Road, Braeside, Victoria 3195, Australia TEL: [03] 580-9911

© PIONEER ELECTRONIC CORPORATION 1992

SI MAY 1992 Printed in Japan

This service manual is intended for qualified service technicians; it is not meant for the casual do-it-yourselfer. Qualified technicians have the necessary test equipment and tools, and have been trained to properly and safely repair complex products such as those covered by this manual.
Improperly performed repairs can adversely affect the safety and reliability of the product and may void the warranty. If you are not qualified to perform the repair of this product properly and safely, you should not risk trying to do so and refer the repair to a qualified service technician.

WARNING
Lead in solder used in this product is listed by the California Health and Welfare agency as a known reproductive toxicant which may cause birth defects or other reproductive harm (California Health & Safety Code, Section 25249.5).
When servicing or handling circuit boards and other components which contain lead in solder, avoid unprotected skin contact with the solder. Also, when soldering do not inhale any smoke or fumes produced.

1. SAFETY INFORMATION

(FOR USA MODEL ONLY)

1. SAFETY PRECAUTIONS

The following check should be performed for the continued protection of the customer and service technician.

LEAKAGE CURRENT CHECK

Measure leakage current to a known earth ground (water pipe, conduit, etc.) by connecting a leakage current tester such as Simpson Model 229-2 or equivalent between the earth ground and all exposed metal parts of the appliance (input/output terminals, screwheads, metal overlays, control shaft, etc.). Plug the AC line cord of the appliance directly into a 120V AC 60Hz outlet and turn the AC power switch on. Any current measured must not exceed 0.5mA.

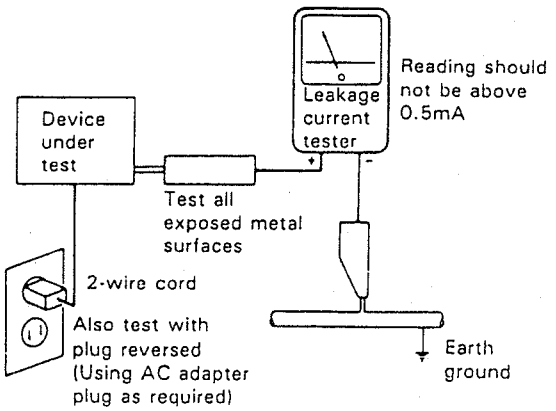

AC Leakage Test

ANY MEASUREMENTS NOT WITHIN THE LIMITS OUTLINED ABOVE ARE INDICATIVE OF A POTENTIAL SHOCK HAZARD AND MUST BE CORRECTED BEFORE RETURNING THE APPLIANCE TO THE CUSTOMER.

2. PRODUCT SAFETY NOTICE

Many electrical and mechanical parts in the appliance have special safety related characteristics. These are often not evident from visual inspection nor the protection afforded by them necessarily can be obtained by using replacement components rated for voltage, wattage, etc. Replacement parts which have these special safety characteristics are identified in this Service Manual.

Electrical components having such features are identified by marking with a ⚠ on the schematics and on the parts list in this Service Manual.
The use of a substitute replacement component which dose not have the same safety characteristics as the PIONEER recommended replacement one, shown in the parts list in this Service Manual, may create shock, fire, or other hazards.

Product Safety is continuously under review and new instructions are issued from time to time. For the latest information, always consult the current PIONEER Service Manual. A subscription to, or additional copies of, PIONEER Service Manual may be obtained at a nominal charge from PIONEER.

2. PACKING AND PARTS LIST

NOTES:

- Parts marked by "NSP" are generally unavailable because they are not in our Master Spare Parts List.
- The ⚠ mark found on some component parts indicates the importance of the safety factor of the part. Therefore, when replacing, be sure to use parts of identical designation.
- Parts marked by "⊙" are not always kept in stock. Their delivery time may be longer than usual or they may be unavailable.

Parts List

Mark	No.	Description	Part No.
	1	Connection cord (with mini plug)	PDE – 319
	2	Connection cord assembly	RDE1002
	3	Control cord	RDE1030
	4	Operating instructions (English : KUC)	RRB1120
		Operating instructions (English/French : KUC/CA)	RRE1064
	5	Pad (R)	RHA1045
	6	Pad (F)	RHA1088
	7	Packing case	RHG1373
	8	Sheet	RHX – 034
	9	Connection cord	RDE – 010
	10	Subsidiary manual	RRY1005
NSP	101	Warranty card	ARY1044

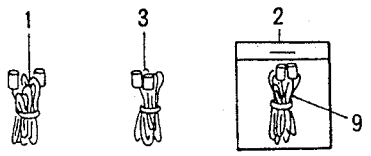

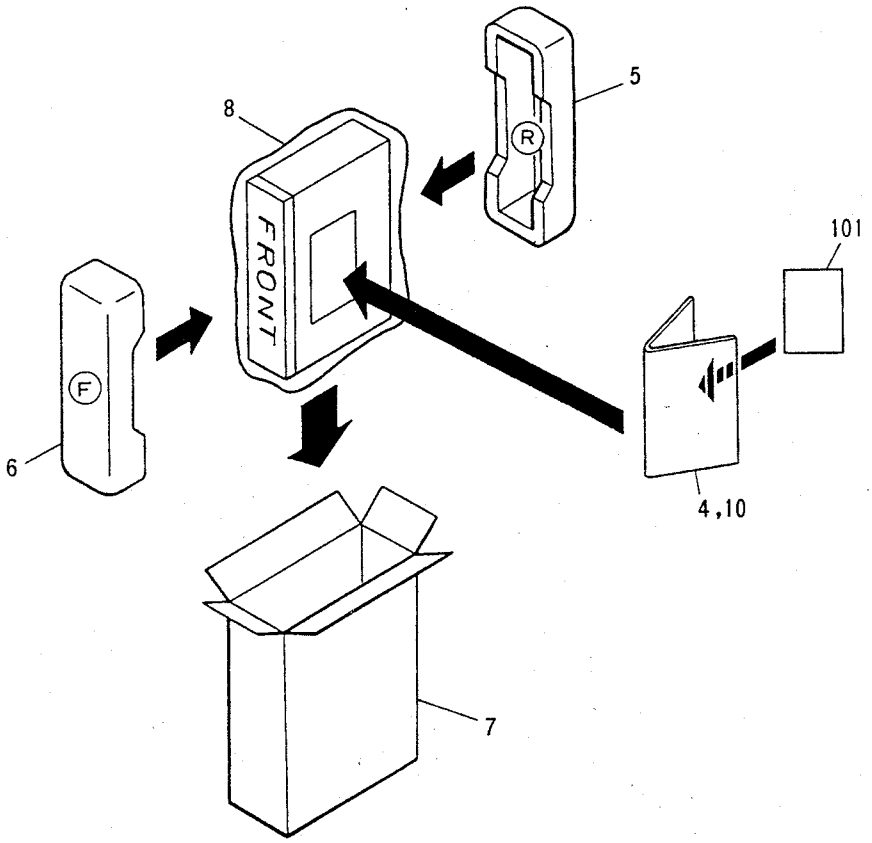

3. EXPLODED VIEWS AND PARTS LIST

NOTES:

- Parts marked by "NSP" are generally unavailable because they are not in our Master Spare Parts List.
- The ⚠ mark found on some component parts indicates the importance of the safety factor of the part. Therefore, when replacing, be sure to use parts of identical designation.
- Parts marked by "⊙" are not always kept in stock. Their delivery time may be longer than usual or they may be unavailable.

3.1 EXTERIOR

Parts List

Mark	No.	Description	Part No.
⚠	1	Strain relief	CM – 22C
⚠	2	AC power cord	PDG1015
	3	Lead card 24P	RDD1264
⚠	4	FU1, FU2 Fuse (1.5A)	REK1001
⚠	5	Power transformer	RTT1165
⊙	6	Mechanism unit (Deck II)	RYM1170
⊙	7	Mechanism unit (Deck I)	RYM1171
	8	Door spring L	RBH1304
	9	Door spring R	RBH1305
	10	Half pressure spring	RBK1004
	11	Damper assembly	REC1005
	12	Foot assembly	PXA1201
	13	Counter knob	RAC1426
	14	Power knob	RAC1712
	15	Slide knob	RAC1713
	16	Function knob A	RAC1715
	17	Function knob B	RAC1717
	18	VR knob	RAC1719
	19	Eject knob	RAC1722
	20	Door pocket R	RAH2074
	21	Door pocket L	RAH2078
	22	Remain display paper	REE – 113
	23	FL lens	RAH2082
	24	Door lens	RAH2086
	25	Screw	BBZ20P040FMC
	26	Screw	BBZ30P060FZK
	27	Screw	BBZ30P080FMC
	28	Screw	IBZ30P150FCU
	29	Screw	PMA30P060FMC
	30	Cord clamper	REC – 371
	31	Front panel assembly	RXX1520
	32	Bonnet assembly	RXX1521

Mark	No.	Description	Part No.
NSP	101	PCB spacer	PNY – 404
NSP	102	Main chassis	RNB1070
NSP	103	SW bracket	RNE1441
NSP	104	Mechanism shield plate	RNE1519
NSP	105	Name plate	PAM1407
	106	.....	
NSP	107	Front panel	RAH2068
NSP	108	Rear panel	RNA1576
NSP	109	MAIN unit	RWZ2523
NSP	110	H.PHONE unit	RWZ2524
NSP	111	OPERATE 1 unit	RWZ2525
NSP	112	OPERATE 2 unit	RWZ2526
NSP	113	DISPLAY unit	RWZ2527
NSP	114	TR SEC unit	RWZ2528

Exterior

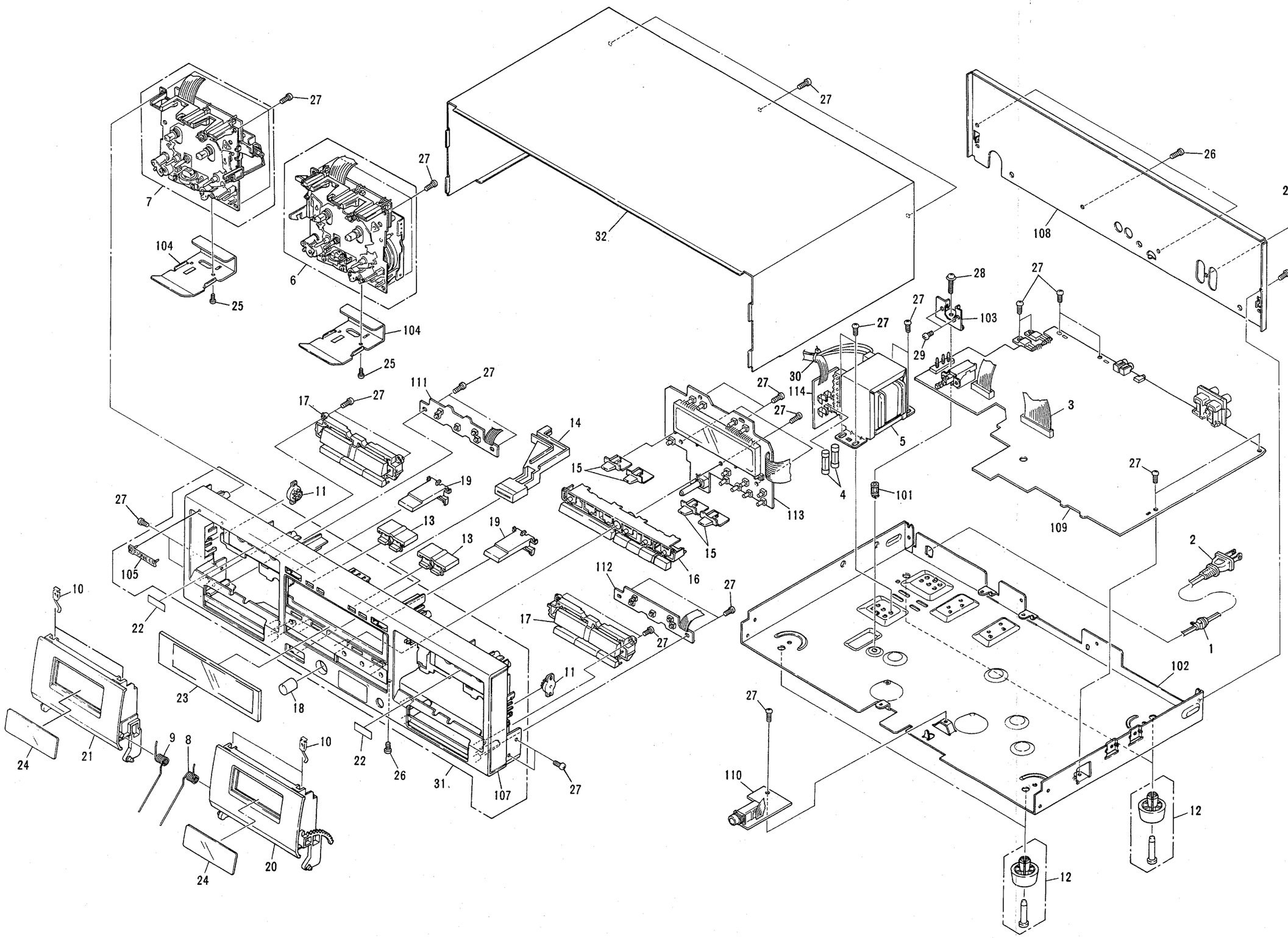
27
7
104
25
6
104
25
27
32
27
26
108
27
26
28
27
103
27
29
30
114
27
5
3
27
111
27
17
14
15
19
11
13
13
19
15
16
113
4
101
27
109
2
105
22
10
112
27
17
27
1
102
23
18
11
27
24
21
9
8
10
22
26
31
107
27
110
12
24
20
12

3.2 MECHANISM UNIT (DECK I)

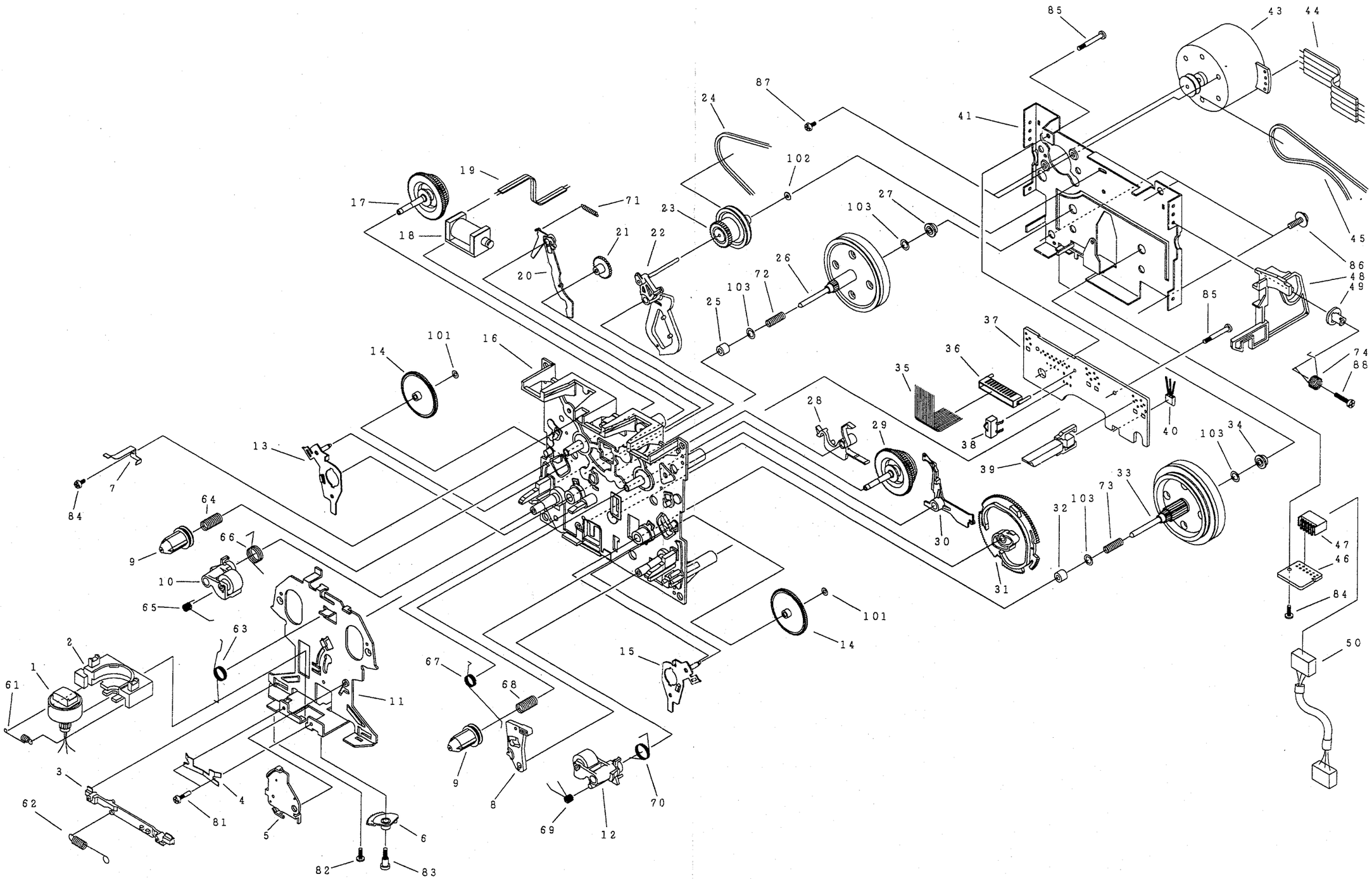

Parts List

Mark	No.	Description	Part No.
	1	ASS'Y HOLDER HEAD	RXA1400
	2	FLAME HEAD	RNK1715
	3	LEVER HEAD	RNK1716
	4	SPRING AZIMUTH	RBK1006
	5	ASS'Y ARM ASSIST	RXA1401
	6	GEAR ARM HEAD	RNK1717
	7	SPRING CASSETTE	RBK1039
	8	EJECT LOCK	RNK1718
	9	CAP REEL	RNK1719
	10	ASS'Y PINCH ARM L	RXA1403
	11	CHASSIS HEAD	RNE1437
	12	ASS'Y PINCH ARM R	RXA1404
	13	ASS'Y ARM PLAY L	RXA1405
	14	GEAR PLAY	RNK1720
	15	ASS'Y ARM PLAY R	RXA1406
	16	CHASSIS OS.	RXA1411
	17	ASS'Y SUB REEL L	RXA1407
⚠	18	SOLENOID	RXP1017
	19	WIRE	RDC1006
	20	ARM RVS	RNK1721
	21	GEAR FF	RNK1723
	22	ASS'Y ARM FR	RXA1412
	23	ASS'Y PULLEY FR	RXA1413
	24	BELT FR	REB1158
	25	METAL	RNG1048
	26	ASS'Y FLYWHEEL L	RXA1423
	27	METAL	RNG1005
	28	ARM BRAKE	RNK1724
	29	ASS'Y SUB REEL R	RXA1408
	30	ARM TRIGGER	RNK1722
	31	GEAR CAM	RNK1725
	32	METAL	RNG1049
	33	ASS'Y FLYWHEEL R	RXA1424
	34	METAL	RNG1004
	35	WIRE (12P)	RDD1216
NSP	36	HOLDER WIRE	RNK1683
	37	P.C. BOARD	RNP1347
	38	SWITCH MODE	RSN1020
	39	SWITCH (LEAF)	RSN1019
	40	HALL IC.	DN6851A
	41	BRACKET FW	RNE1438
	42	.....	
	43	ASS'Y MOTOR	RXM1052
NSP	44	WIRE	RDD1012
	45	BELT MAIN	REB1159
	46	P.C. BOARD	RNP1348
	47	HOUSING	RKP1396
	48	EJECT LEVER R	RNK1703
	49	COLLAR	RNK1704
	50	WIRE HEAD	RKP1398

Mark	No.	Description	Part No.
	61	SPRING	RBH1282
	62	SPRING	RBH1283
	63	SPRING	RBH1284
	64	SPRING	RBH1286
	65	SPRING	RBH1288
	66	SPRING	RBH1290
	67	SPRING	RBH1285
	68	SPRING	RBH1287
	69	SPRING	RBH1289
	70	SPRING	RBH1291
	71	SPRING	RBH1292
	72	SPRING	RBH1061
	73	SPRING	RBH1060
	74	SPRING	RBH1293
	81	SCREW	RBA1023
	82	SCREW	RBA1027
	83	SCREW	RBA1030
	84	SCREW	PCZ20P040FMC
	85	SCREW	RBA1093
	86	SCREW	RBA1094
	87	SCREW	RBA1086
	88	SCREW	RBA1095
	101	WASHER	RBF1044
	102	WASHER	WA16D032D025
	103	WASHER	WA26D047D013

3.3 MECHANISM UNIT (DECK II)

Parts List

Mark	No.	Description	Part No.
	1	ASS'Y HOLDER HEAD	RXA1416
	2	FLAME HEAD	RNK1715
	3	LEVER HEAD	RNK1716
	4	SPRING AZIMUTH	RBK1006
	5	ASS'Y ARM ASSIST	RXA1401
	6	GEAR ARM HEAD	RNK1717
	7	SPRING CASSETTE	RBK1039
	8	EJECT LOCK	RNK1718
	9	CAP REEL	RNK1719
	10	ASS'Y PINCH ARM L	RXA1403
	11	CHASSIS HEAD	RNE1437
	12	ASS'Y PINCH ARM R	RXA1404
	13	ASS'Y ARM PLAY L	RXA1405
	14	GEAR PLAY	RNK1720
	15	ASS'Y ARM PLAY R	RXA1406
	16	CHASSIS OS.	RXA1411
	17	ASS'Y SUB REEL L	RXA1407
⚠	18	SOLENOID	RXP1017
	19	WIRE	RDC1006
	20	ARM RVS	RNK1721
	21	GEAR FF	RNK1723
	22	ASS'Y ARM FR	RXA1412
	23	ASS'Y PULLEY FR	RXA1413
	24	BELT FR	REB1158
	25	METAL	RNG1048
	26	ASS'Y FLYWHEEL L	RXA1423
	27	METAL	RNG1005
	28	ARM BRAKE	RNK1724
	29	ASS'Y SUB REEL R	RXA1408
	30	ARM TRIGGER	RNK1722
	31	GEAR CAM	RNK1725
	32	METAL	RNG1049
	33	ASS'Y FLYWHEEL R	RXA1424
	34	METAL	RNG1004
	35	WIRE (14P)	RDD1217
NSP	36	HOLDER WIRE	RNK1683
	37	P.C. BOARD	RNP1347
	38	SWITCH MODE	RSN1020
	39	SWITCH (LEAF)	RSN1019
	40	HALL IC.	DN6851A
	41	BRACKET FW	RNE1438
	42	.....	
	43	ASS'Y MOTOR	RXM1052
NSP	44	WIRE	RDD1012
	45	BELT MAIN	REB1159
	46	P.C. BOARD	RNP1348
	47	HOUSING	RKP1397
	48	EJECT LEVER L	RNK1702
	49	COLLAR	RNK1704
	50	WIRE HEAD	RKP1399

Mark	No.	Description	Part No.
	61	SPRING	RBH1282
	62	SPRING	RBH1283
	63	SPRING	RBH1284
	64	SPRING	RBH1286
	65	SPRING	RBH1288
	66	SPRING	RBH1290
	67	SPRING	RBH1285
	68	SPRING	RBH1287
	69	SPRING	RBH1289
	70	SPRING	RBH1291
	71	SPRING	RBH1292
	72	SPRING	RBH1061
	73	SPRING	RBH1060
	74	SPRING	RBH1294
	81	SCREW	RBA1023
	82	SCREW	RBA1027
	83	SCREW	RBA1030
	84	SCREW	PCZ20P040FMC
	85	SCREW	RBA1093
	86	SCREW	RBA1094
	87	SCREW	RBA1086
	88	SCREW	RBA1095
	101	WASHER	RBF1044
	102	WASHER	WA16D032D025
	103	WASHER	WA26D047D013

Mechanism Unit (Deck II)

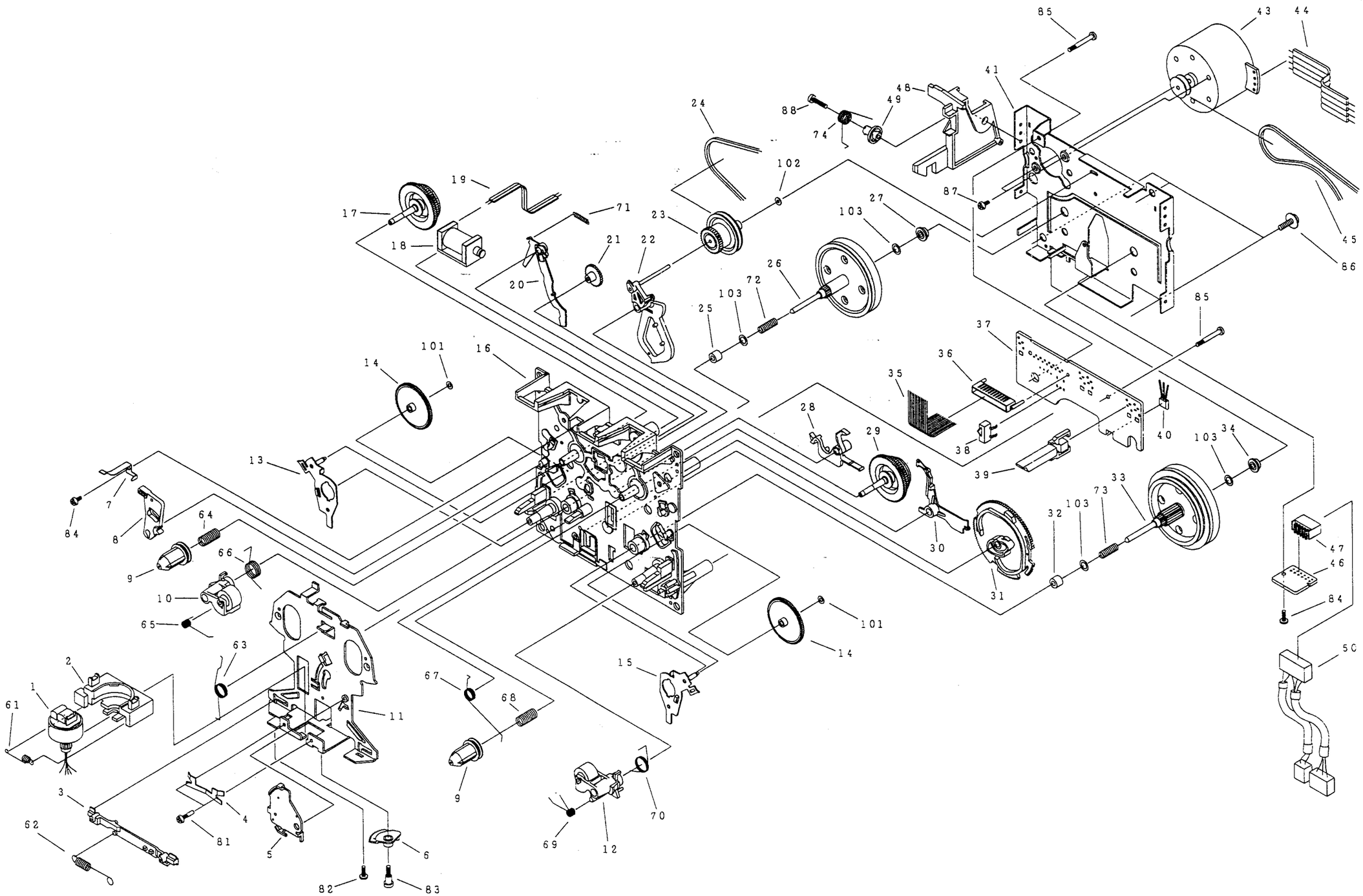

4. BLOCK DIAGRAM

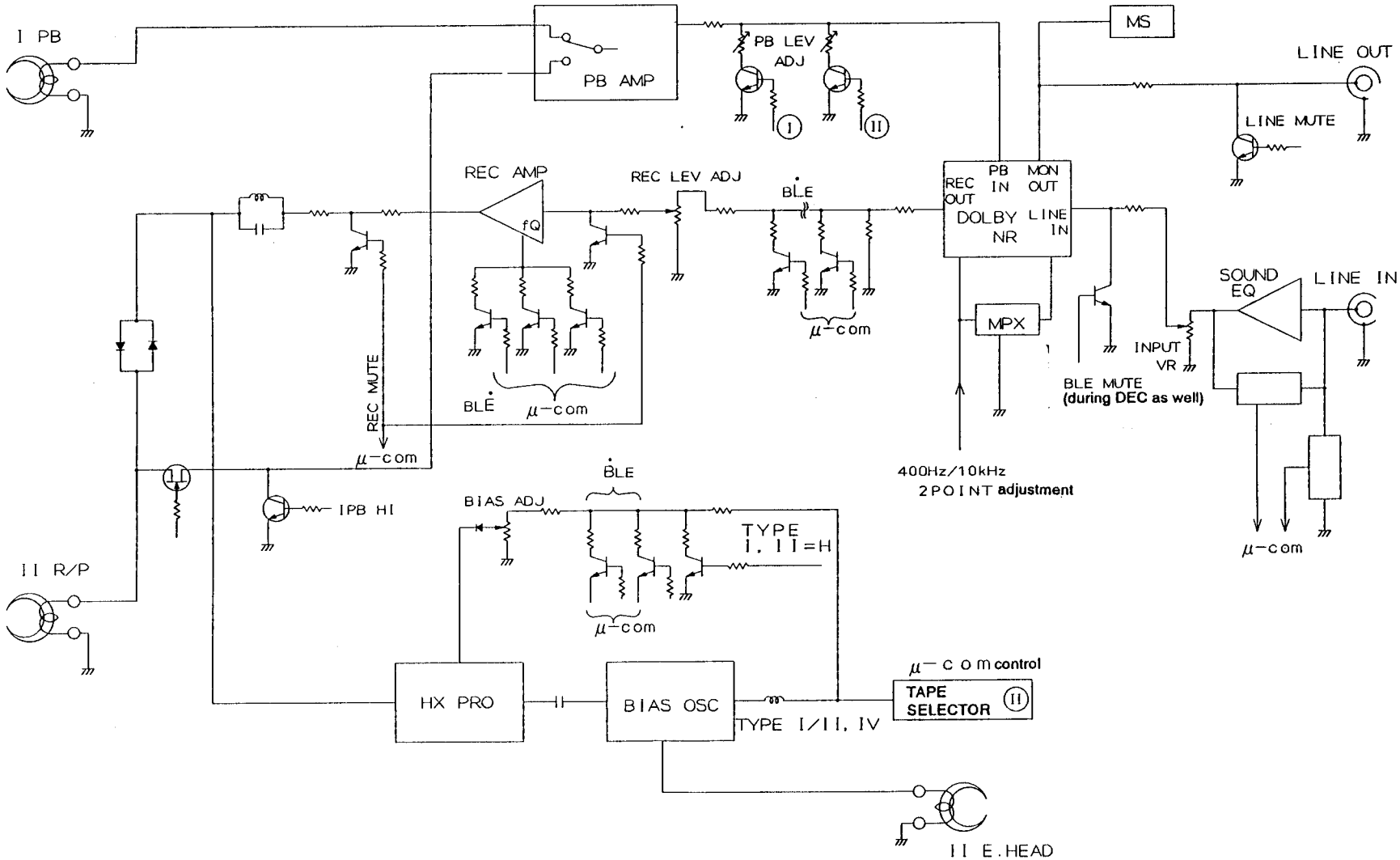

1. RESISTORS :
Indicated in Ω, 1/4W, 1/6W, 1/8W, ±5% tolerance unless otherwise noted k ; kΩ, M ; MΩ, (F) ; ±1%, (G) ; ±2%, (K) ; ±10%,(M) ; ±20% tolerance.

2. CAPACITORS :
Indicated in capacity (μF) /voltage (V) unless otherwise noted p ; pF.
Indication without voltage is 50V except electrolytic capacitor.

3. VOLTAGE CURRENT :
; DC voltage (V) in stop mode.
← mA ; DC current in stop mode.

4. OTHERS :
→ ; Signal route.
⊘ ; Adjusting point
The ⚠ mark found on some component parts indicates the importance of the safety factor of the part. Therefore, when replacing, be sure to use parts of identical designation.
※ marked capacitors and resistors have parts numbers.

This is the basic schematic diagram, but the actual circuit may vary due to improvements in design.

5. SWITCHES (The underlined indicates the switch position)

MAIN UNIT
S1201 : POWER SW ON – OFF

OPERATE 1 UNIT
S1301 : FWD
S1302 : REV
S1303 : STOP
S1305 : FF
S1306 : REW

OPERATE 2 UNIT
S1401 : FWD
S1402 : REV
S1403 : STOP
S1406 : REV

DISPLAY UNIT
S1504 : 2 – REC
S1505 : 2 – PAUSE
S1506 : 2 – MUTE
S1508 : 2 – BLE
S1510 : CD SYNC
S1511 : RESET 1 – COUNTER
S1512 : MODE 1 – COUNTER
S1513 : RESET 2 – COUNTER
S1514 : MODE 2 – COUNTER
S1515 : X1 COPY
S1516 : X2 COPY
S1518 : RELAY/SKIP
S1521 : DOLBY B – OFF – C
S1522 : CAR – NOR – HP
S1523 : TIMER REC – OFF – PLAY
S1524 : ⇄ – ⊆ – ⊂⊃

5. SCHEMATIC DIAGRAM

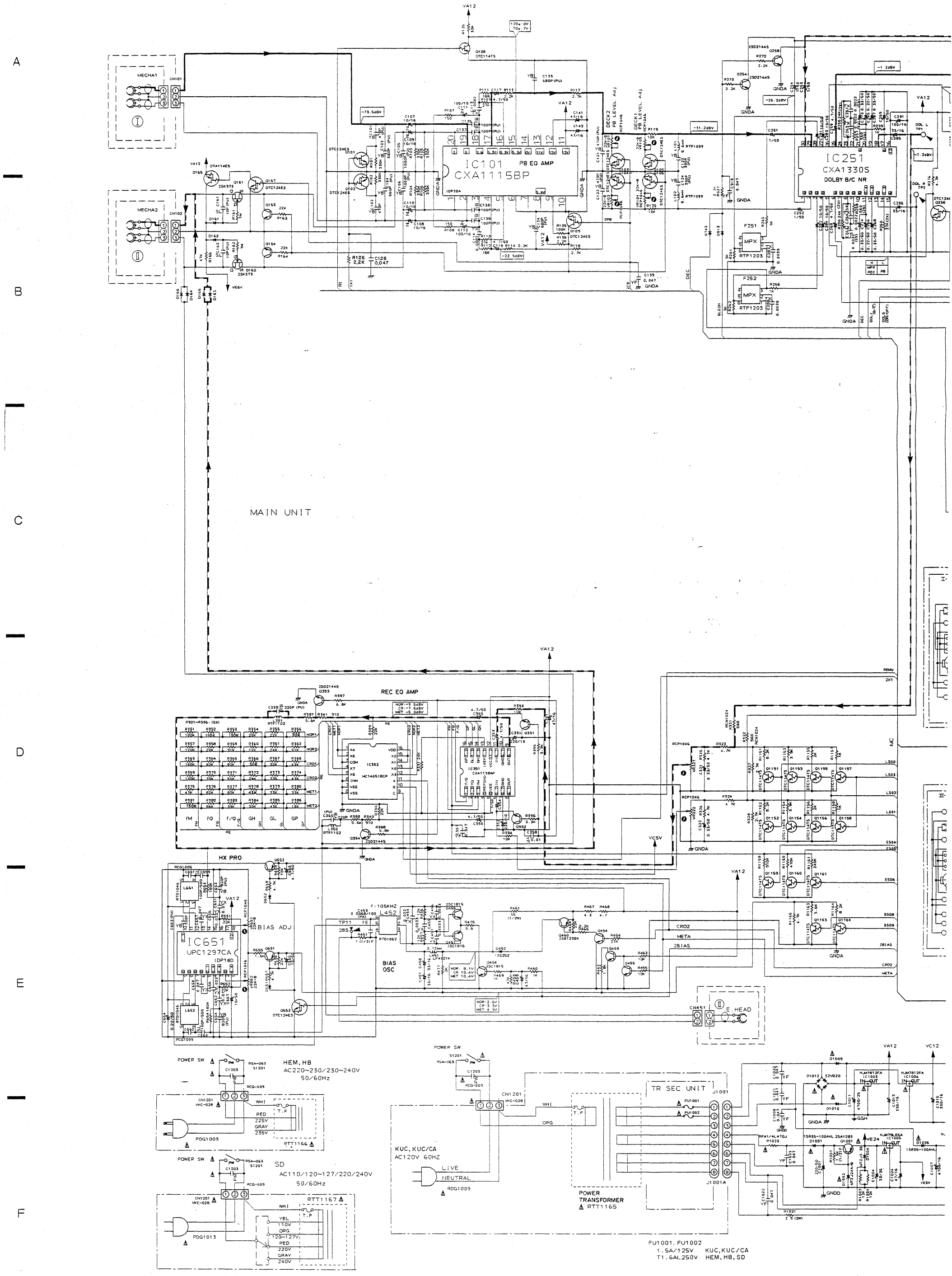

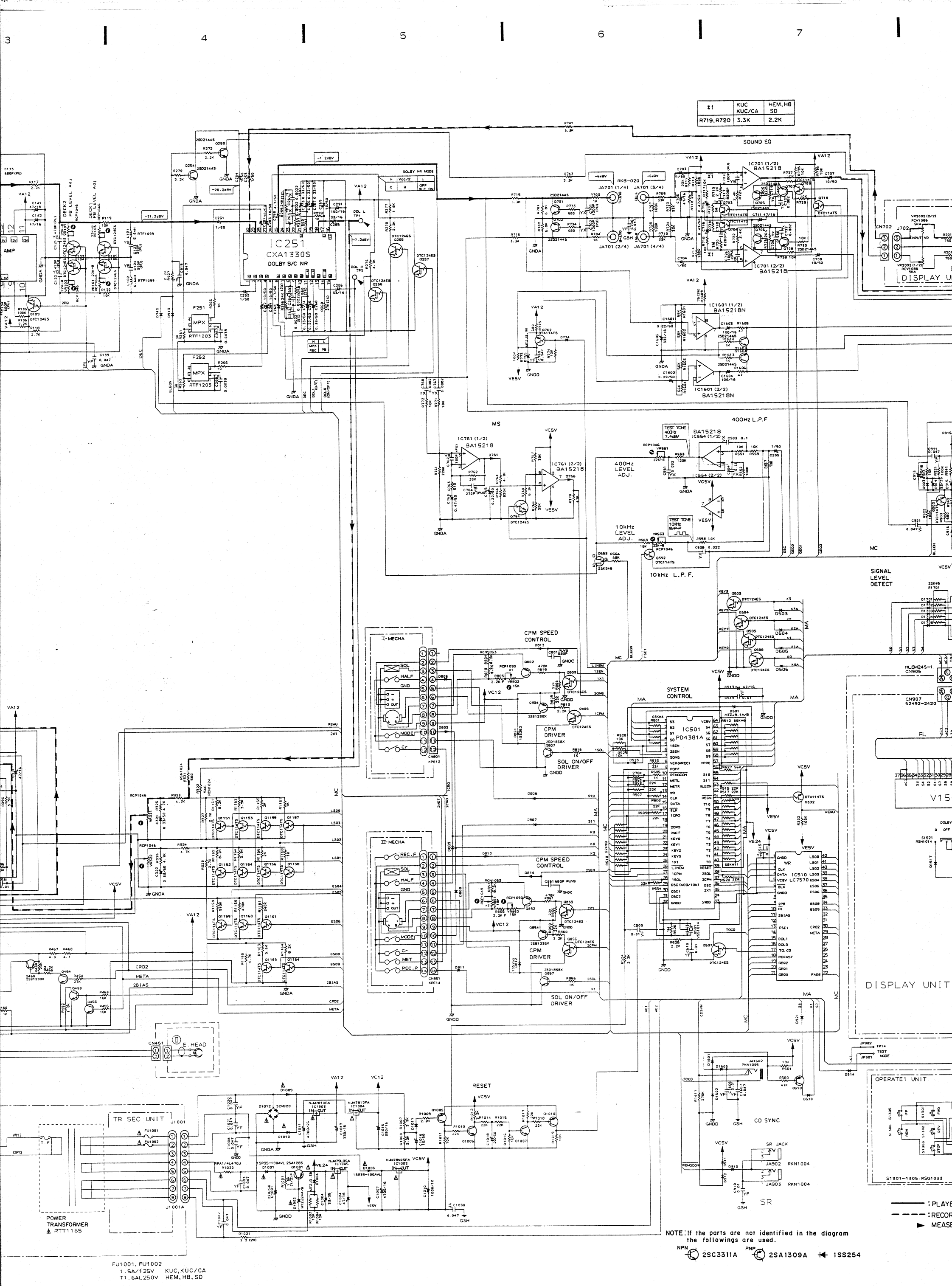
IC251
CXA1330S
DOLBY B/C NR
SOUND EQ
400Hz L.P.F
10kHz L.P.F.
400Hz LEVEL ADJ.
10kHz LEVEL ADJ.
SIGNAL LEVEL DETECT
CPM SPEED CONTROL
CPM DRIVER
SOL ON/OFF DRIVER
SYSTEM CONTROL
IC501 PD4381A
IC510 LC7570
DISPLAY UNIT
OPERATE1 UNIT
CD SYNC
SR
RESET
TR SEC UNIT
POWER TRANSFORMER RTT1165
E. HEAD
I-MECHA
II-MECHA
FU1001, FU1002
1.5A/125V KUC,KUC/CA
T1.6AL250V HEM,HB,SD
NOTE: If the parts are not identified in the diagram the followings are used.
NPN 2SC3311A
PNP 2SA1309A
1SS254

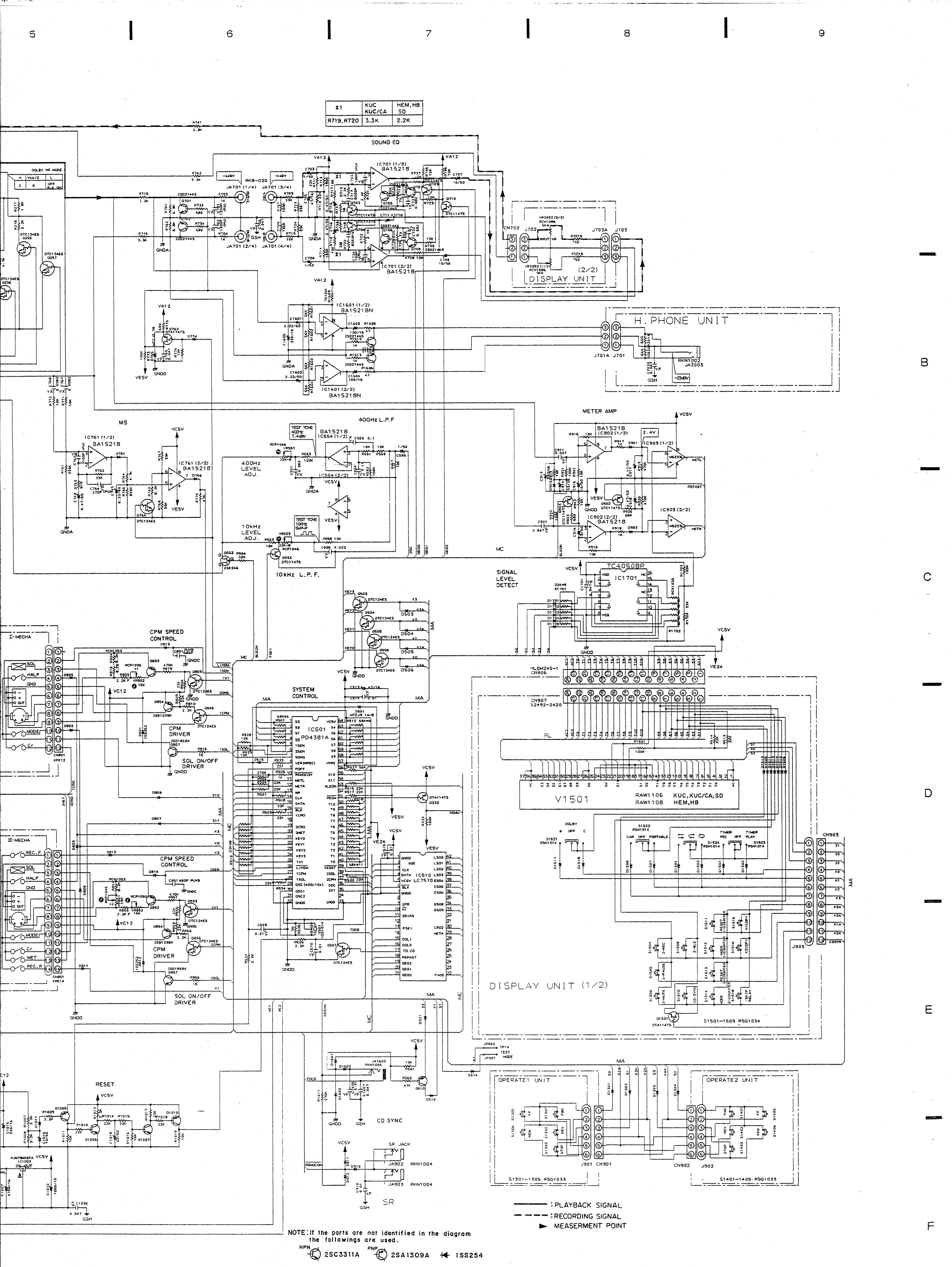

X1	KUC KUC/CA	HEM,HB SD
R719,R720	3.3K	2.2K

6. PCB CONNECTIONS DIAGRAM

- View from component side

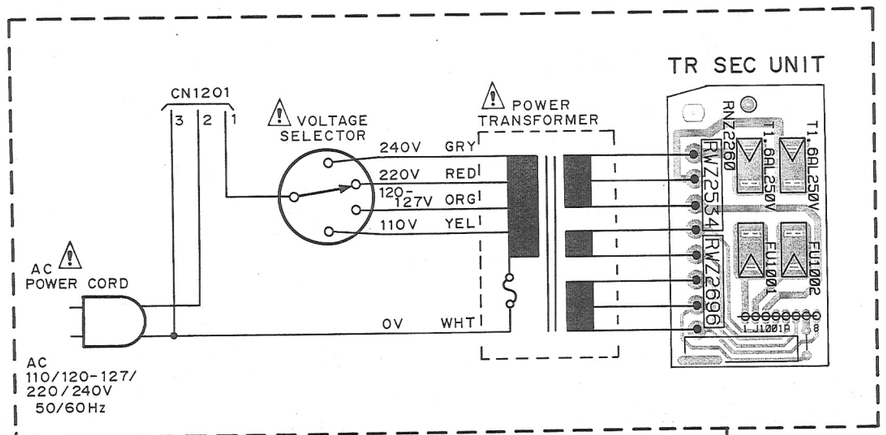

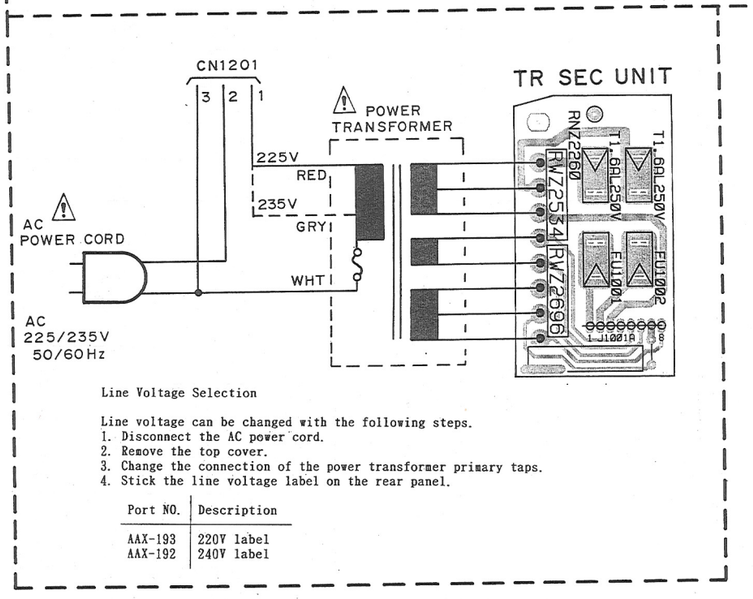

Line Voltage Selection

Line voltage can be changed with the following steps.
1. Disconnect the AC power cord.
2. Remove the top cover.
3. Change the connection of the power transformer primary taps.
4. Stick the line voltage label on the rear panel.

Port NO.	Description
AAX-193	220V label
AAX-192	240V label

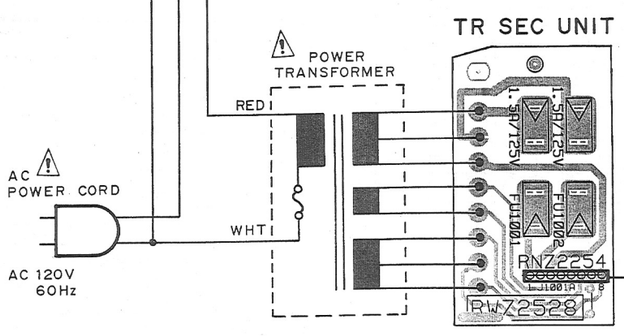

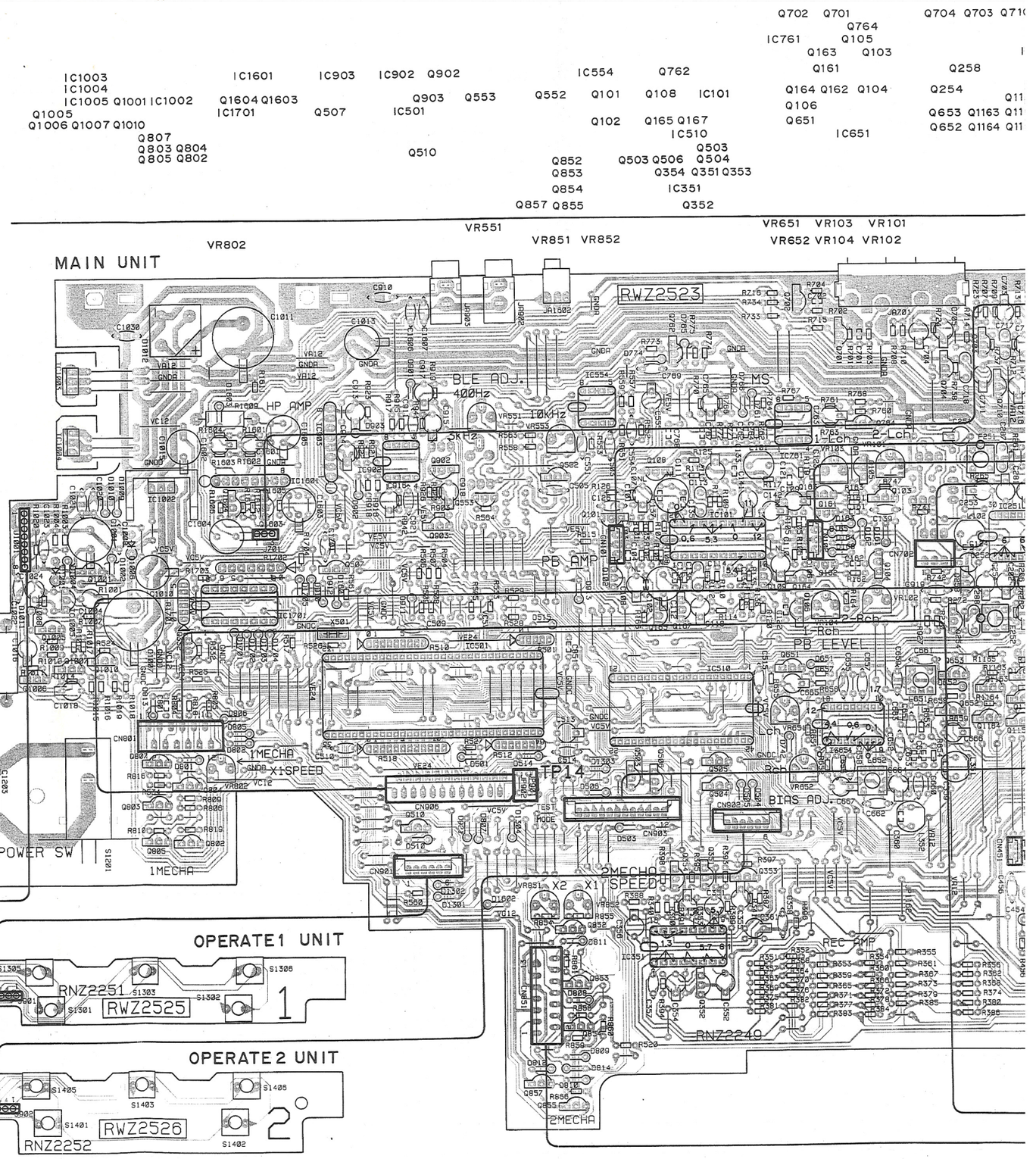

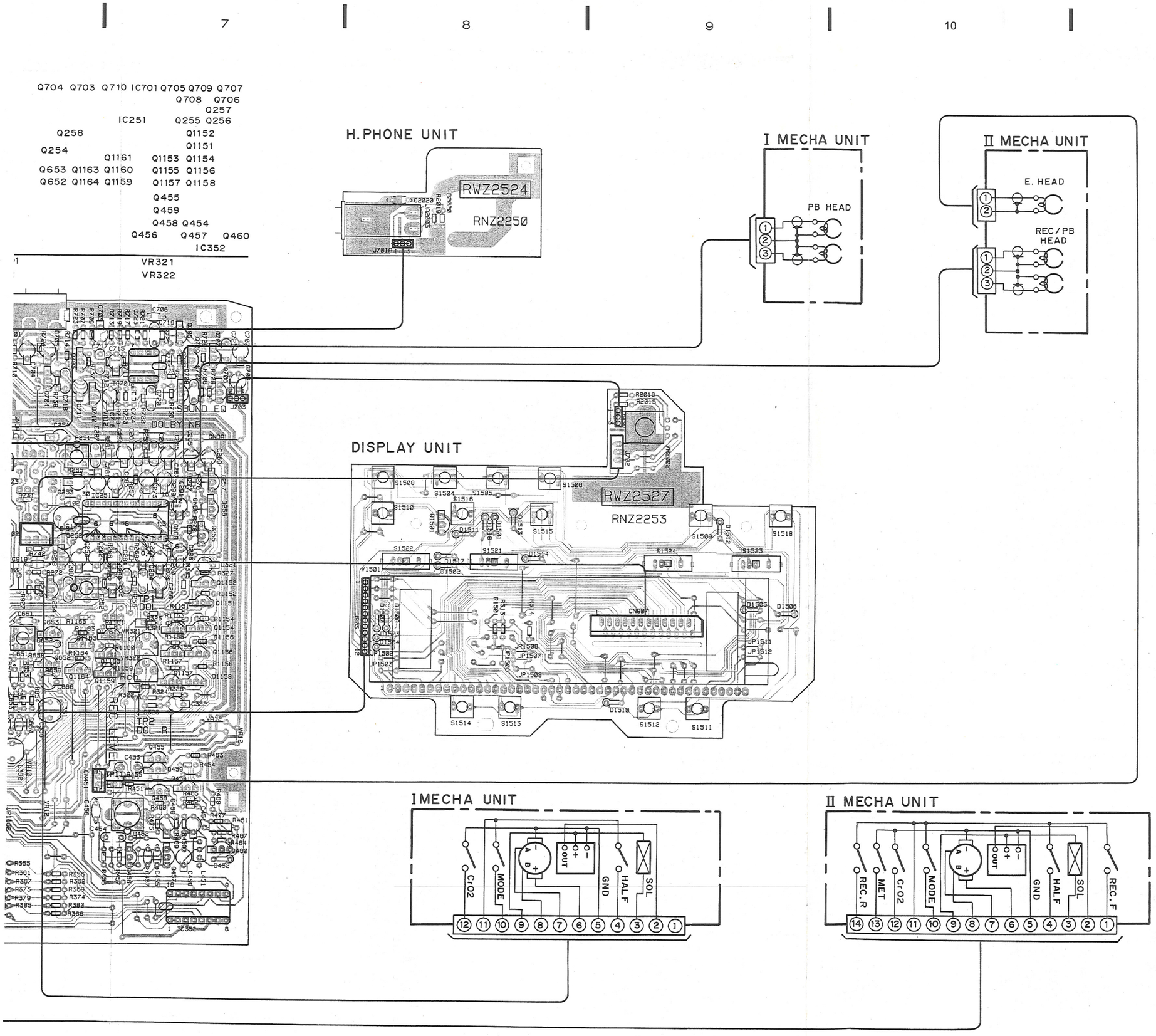

P.C.B. pattern diagram indication.	Corresponding part symbol	Part name
		Transistor
		FET
		Diode
		Zenner diode
		LED
		Varactor
		Tact switch
		Inductor
		Coil
		Transformer
		Filter
		Ceramic capacitor
		Mylar capacitor
		Styrol capacitor
		Electrolytic capacitor (Non polarized)
		Electrolytic capacitor (Noiseless)
		Electrolytic capacitor (Polarized)
		Electrolytic capacitor (Polarized)
		Power capacitor
		Semi-fixed resistor
		Resistor array
		Resistor
		Resonator
		Thermistor

1. This P.C.B. connection diagram is viewed from the parts mounted side.
2. The parts which have been mounted on the board can be replaced with those shown with the corresponding wiring symbols listed in the above Table.
3. The capacitor terminal marked with ▭ shows negative terminal.
4. The diode marked with O shows cathode side.
5. The transistor terminal marked with ▭ shows emitter.

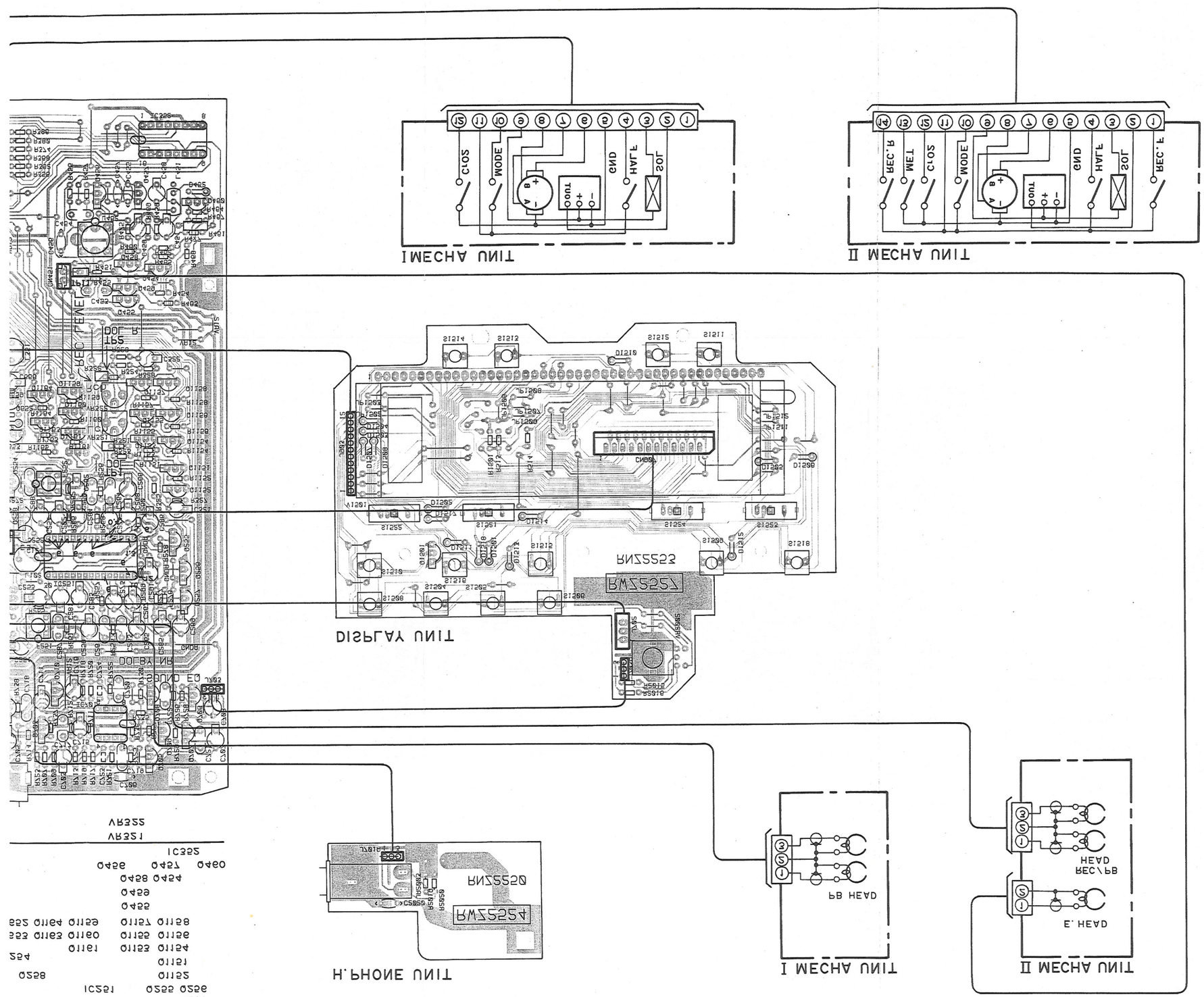
I MECHA UNIT
II MECHA UNIT
DISPLAY UNIT
H.PHONE UNIT
I MECHA UNIT
II MECHA UNIT
PB HEAD
REC\PB HEAD
E. HEAD
RM2525A
RM2525B
RM2525C
RM2525D
MAIN PCB
REC PLANE
1ST DOUBLE
2ND DOUBLE
1ST DOUBLE
2ND DOUBLE

6. PCB CONNECTIONS DIAGRAM

- View from soldering side

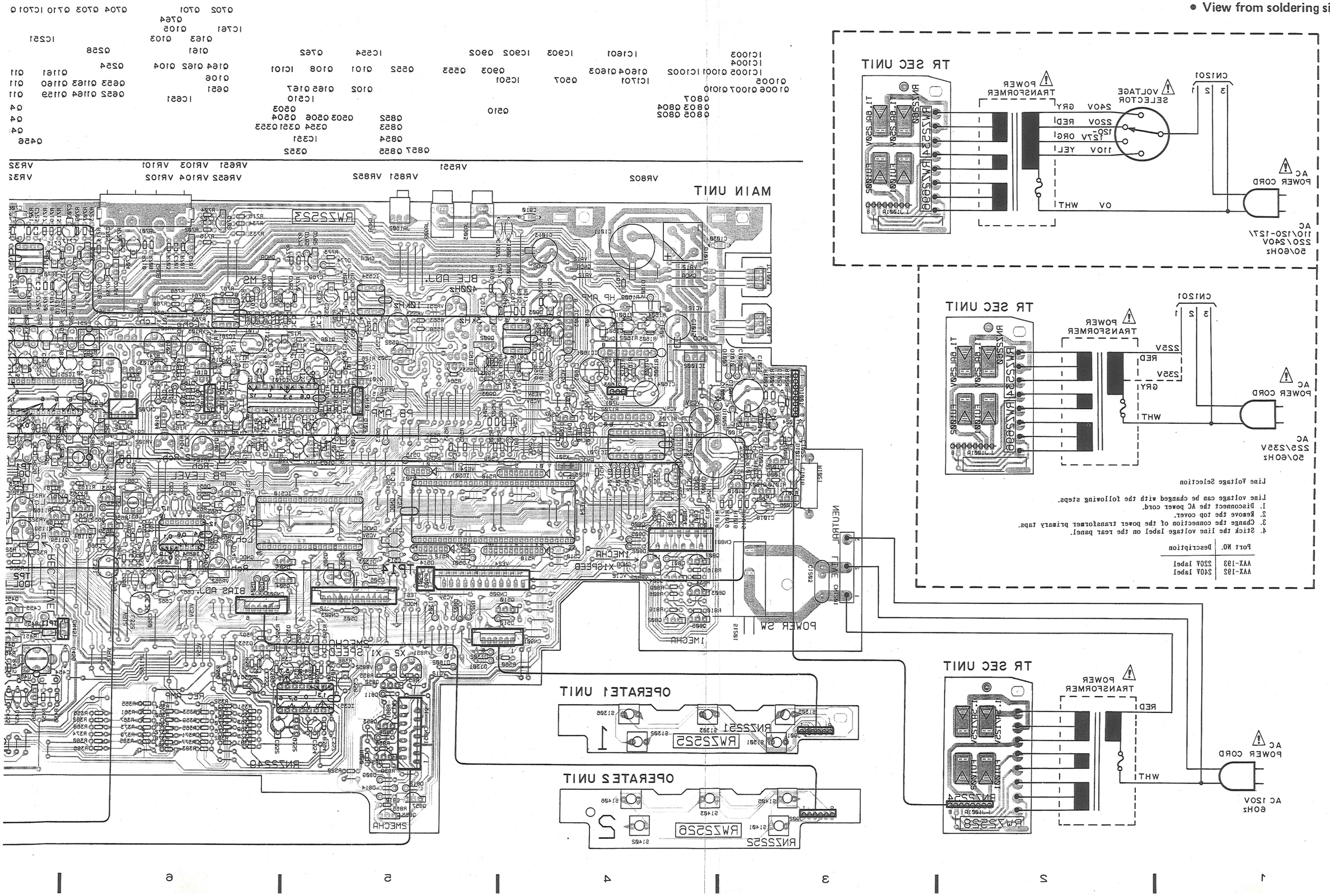

7. PCB PARTS LIST

NOTES:

- Parts marked by "NSP" are generally unavailable because they are not in our Master Spare Parts List.
- Parts marked by "⊙" are not always kept in stock. Their delivery time may be longer than usual or they may be unavailable.
- The ⚠ mark found on some component parts indicates the importance of the safety factor of the part. Therefore, when replacing, be sure to use parts of identical designation.
- When ordering resistors, first convert resistance values into code form as shown in the following examples.

Ex.1 When there are 2 effective digits (any digit apart from 0), such as 560 ohm and 47k ohm (tolerance is shown by J=5%, and K=10%)

560 Ω → 56 × 10^1 → 561 ····· RD1/4PS 5 6 1 J
47k Ω → 47 × 10^3 → 473 ····· RD1/4PS 4 7 3 J
0.5 Ω → 0R5 ····· RN2H 0 R 5 K
1 Ω → 010 ····· RS1P 0 1 0 K

Ex.2 When there are 3 effective digits (such as in high precision metal film resistors).

5.62k Ω → 562 × 10^1 → 5621 ····· RN1/4SR 5 6 2 1 F

Mark	No.	Description	Part No.
		LIST OF ASSEMBLIES	
⊙		MOTHER UNIT	RWM1475
NSP		├MAIN UNIT	RWZ2523
NSP		├H. PHONE UNIT	RWZ2524
NSP		├OPERATE 1 UNIT	RWZ2525
NSP		├OPERATE 2 UNIT	RWZ2526
NSP		├DISPLAY UNIT	RWZ2527
NSP		└TR SEC UNIT	RWZ2528
		MAIN UNIT	
		SEMICONDUCTORS	
	IC101	PB-EQ AMP IC	CXA1115BP
	IC251	DOLBY B/C IC	CXA1330S-P
	IC351	REC EQUALIZER IC	CXA1198AP
	IC352		MC14051BCP
	IC501	MCU	PD4381A
	IC510	FL STATIC DRIVER IC	LC7570
	IC554	OP-AMP IC	BA15218
	IC651	DOLBY HX PRO IC	UPC1297CA
	IC701	OP-AMP IC	BA15218
	IC761	OP-AMP IC	BA15218
	IC902	OP-AMP IC	BA15218
	IC903	DUAL-COMPARATOR IC	M5233L
⚠	IC1002	REGULATOR IC	NJM78M05FA
⚠	IC1003, 1004	REGULATOR IC	NJM7812FA
⚠	IC1005	REGULATOR IC	NJM79L05A
	IC1601	IC	BA15218N
	IC1701	CMOS LOGIC IC	TC4050BP
	Q101-106	TRANSISTOR	DTC124ES
	Q108	DIGITAL TRANSISTOR	DTC114TS
	Q109	TRANSISTOR	DTC124ES
	Q161, 162	N-FET	2SK373
	Q163, 164	TRANSISTOR	2SC3311A
	Q165	DIGITAL TRANSISTOR	DTA114ES
	Q167	TRANSISTOR	DTC124ES
	Q254	TRANSISTOR	2SD2144S
	Q255-257	TRANSISTOR	DTC124ES
	Q258	TRANSISTOR	2SD2144S
	Q332	DIGITAL TRANSISTOR	DTA114TS
	Q351, 352	TRANSISTOR	2SC3311A
	Q353, 354	TRANSISTOR	2SD2144S
	Q454, 455	TRANSISTOR	2SC3311A
	Q456-458	TRANSISTOR	2SC1815
	Q459	TRANSISTOR	2SC3311A
	Q460	TRANSISTOR	2SB1238X
	Q503-507	TRANSISTOR	DTC124ES
	Q510	TRANSISTOR	2SA1309A
	Q552	DIGITAL TRANSISTOR	DTC114TS
	Q553	N-FET	2SK246
	Q651, 652	TRANSISTOR	2SA1309A
	Q653	TRANSISTOR	DTC124ES
	Q701, 702	TRANSISTOR	2SD2144S
	Q703, 704	DIGITAL TRANSISTOR	DTC114TS
	Q705-708	TRANSISTOR	2SD2144S
	Q709, 710	DIGITAL TRANSISTOR	DTC114TS
	Q762	DIGITAL TRANSISTOR	DTA114TS
	Q764	TRANSISTOR	DTC124ES
	Q802	TRANSISTOR	2SA1309A
	Q803	TRANSISTOR	DTC124ES
	Q804	TRANSISTOR	2SB1238X
	Q805	TRANSISTOR	DTC124ES
	Q807	TRANSISTOR	2SD1858X
	Q852	TRANSISTOR	2SA1309A
	Q853	TRANSISTOR	DTC124ES
	Q854	TRANSISTOR	2SB1238X
	Q855	TRANSISTOR	DTC124ES
	Q857	TRANSISTOR	2SD1858X
	Q902, 903	DIGITAL TRANSISTOR	DTC114TS
⚠	Q1001	TRANSISTOR	2SA1283
	Q1005	TRANSISTOR	2SA1309A
	Q1006, 1007	TRANSISTOR	2SC3311A
	Q1010	TRANSISTOR	2SA1309A
	Q1151-1161	DIGITAL TRANSISTOR	DTC114TS
	Q1163, 1164	DIGITAL TRANSISTOR	DTC114TS
	Q1603, 1604	TRANSISTOR	2SD2144S
	D161-166	DIODE	1SS254
	D452	DIODE	1SS252
	D501	ZENER DIODE	MTZJ9.1A
	D503-506	DIODE	1SS254

Mark	No.	Description	Part No.
	D510	DIODE	1SS254
	D514, 515	DIODE	1SS254
	D651, 652	DIODE	1SS254
	D742	DIODE	1SS254
	D761	DIODE	1SS254
	D765	ZENER DIODE	MTZJ3. 9B
	D766	DIODE	1SS254
	D774	DIODE	1SS254
	D801	DIODE	1SS252
	D802	DIODE	1SS254
	D805-811	DIODE	1SS254
	D812	DIODE	1SS252
	D813, 814	DIODE	1SS254
	D901-903	DIODE	1SS254
	D910-913	DIODE	1SS254
	D921	DIODE	1SS254
⚠	D1001	DIODE	1SR35-100AVL
⚠	D1002	ZENER DIODE	MTZJ24A
	D1004	ZENER DIODE	MTZJ3. 3B
⚠	D1006	DIODE	1SR35-100AVL
⚠	D1009-1011	DIODE	1SS254
⚠	D1012		S2VB20
	D1301-1304	DIODE	1SS254
	D1601-1603	DIODE	1SS254
	D1701-1705	DIODE	1SS254

SWITCHES

⚠	S1201	SWITCH	RSA-063

COILS/TRANSFORMERS

	L101, 102	COIL	RTF1099
	L351, 352	COIL	RTF1102
	L451	RADIAL INDUCTOR	LFA121K
	L452	COIL	RTD1062
	L651, 652	COIL	RTD1046
	F251, 252	FILTER	RTF1203

CAPACITORS

	C101, 102	AXIAL CAPACITOR	CKPUYB471K50
	C103, 104	AXIAL CAPACITOR	CKPUYB561K50
	C105, 106	CERAMIC CAPACITOR	CKPUYB102K50
	C107-110	ELECT. CAPACITOR	CEANL100M16
	C111, 112	ELECT. CAPACITOR	CEANL101M10
	C113, 114	AUDIO FILM CAPACITOR	CFTXA822J50
	C117, 118	ELECT. CAPACITOR	CEAS4R7M50
	C121, 122	AXIAL CAPACITOR	CKPUYB471K50
	C123, 124	AXIAL CAPACITOR	CKPUYB391K50
	C126	CERAMIC CAPACITOR	CGCYF473Z50
	C133, 134	AXIAL CAPACITOR	CKPUYB681K50
	C135-138	AXIAL CAPACITOR	CKPUYB101K50
	C139	CERAMIC CAPACITOR	CGCYF473Z50
	C141, 142	ELECT. CAPACITOR	CEAS470M16
	C161, 162	AXIAL CAPACITOR	CCPUSL100J50
	C251-254	ELECT. CAPACITOR	CEAS010M50
	C259, 260	ELECT. CAPACITOR	CEAS4R7M50
	C261-264	AUDIO FILM CAPACITOR	CFTXA222J50
	C265, 266	ELECT. CAPACITOR	CEASR22M50
	C267, 268	ELECT. CAPACITOR	CEASR33M50
	C269	ELECT. CAPACITOR	CEAS100M50
	C273, 274	ELECT. CAPACITOR	CEASR33M50
	C281-284	ELECT. CAPACITOR	CEAS100M50
	C285, 286	ELECT. CAPACITOR	CEAS330M16
	C287, 288	AUDIO FILM CAPACITOR	CFTXA392J50
	C291	ELECT. CAPACITOR	CEAS101M16
	C321, 322	ELECT. CAPACITOR	CEASR33M50
	C351, 352	ELECT. CAPACITOR	CEAS221M10
	C353-356	ELECT. CAPACITOR	CEAS4R7M50
	C357	CERAMIC CAPACITOR	CGCYF473Z50
	C358	CERAMIC CAPACITOR	CKCYF103Z50
	C359, 360	AXIAL CAPACITOR	CKPUYB221K50
	C361	ELECT. CAPACITOR	CEAS470M16
	C451	ELECT. CAPACITOR	CEAS330M16
	C453	CAPACITOR	CQPA682J100
	C454	AUDIO FILM CAPACITOR	CFTXA223J50
	C455-457	CERAMIC CAPACITOR	CGCYX332K25
	C458	ELECT. CAPACITOR	CEAS330M16
	C459	ELECT. CAPACITOR	CEAS470M16
	C503	CERAMIC CAPACITOR	CGCYX104K25
	C505	CERAMIC CAPACITOR	CGCYX223K25
	C509, 510	CERAMIC CAPACITOR	CKCYF103Z50
	C513	ELECT. CAPACITOR	CEAS470M16
	C514, 515	CERAMIC CAPACITOR	CKCYF103Z50
	C551	CERAMIC CAPACITOR	CGCYX823K25
	C554	CERAMIC CAPACITOR	CGCYX103K25
	C555	ELECT. CAPACITOR	CEAS010M50
	C651, 652	CERAMIC CAPACITOR	CGCYX103K25
	C653, 654	AXIAL CAPACITOR	CKPUYB821K50
	C655, 656	CERAMIC CAPACITOR	CGCYX223K25
	C657, 658	CERAMIC CAPACITOR	CGCYX473K25
	C659, 660	CERAMIC CAPACITOR	CCCSL101K500
	C661, 662	CERAMIC CAPACITOR	RCG1005
	C663	AXIAL CAPACITOR	CKPUYB101K50
	C664	ELECT. CAPACITOR	CEASR22M50
	C665	ELECT. CAPACITOR	CEAS100M50
	C666	ELECT. CAPACITOR	CEAS4R7M50
	C667	ELECT. CAPACITOR	CEAS100M50
	C701, 702	CERAMIC CAPACITOR	CKPUYX122M16
	C703, 704	ELECT. CAPACITOR	CEAS010M50
	C705	ELECT. CAPACITOR	CEAS470M16
	C706	CERAMIC CAPACITOR	CGCYF473Z50
	C707, 708	ELECT. CAPACITOR	CEAS100M50
	C711	ELECT. CAPACITOR	CEAS470M16
	C715, 716	ELECT. CAPACITOR	CEASR47M50
	C717, 718	AUDIO FILM CAPACITOR	CFTXA822J50
	C719, 720	AUDIO FILM CAPACITOR	CFTXA563J50
	C721, 722	AUDIO FILM CAPACITOR	CFTXA823J50
	C723, 724	AXIAL CAPACITOR	CKPUYB101K50
	C762	AXIAL CAPACITOR	CKPUYB101K50
	C763	ELECT. CAPACITOR	CEASR47M50
	C764	AXIAL CAPACITOR	CKPUYB271K50
	C765	ELECT. CAPACITOR	CEASR22M50
	C767, 768	CERAMIC CAPACITOR	CGCYX822K25
	C769	CERAMIC CAPACITOR	CGCYF473Z50

Mark	No.	Description	Part No.
	C801	AXIAL CAPACITOR	CKPUYB681K50
	C851	AXIAL CAPACITOR	CKPUYB681K50
	C910	CERAMIC CAPACITOR	CKCYF103Z50
	C911	CERAMIC CAPACITOR	CGCYF473Z50
	C913	ELECT. CAPACITOR	CEAS331M16
	C914	ELECT. CAPACITOR	CEAS330M35
	C915, 916	ELECT. CAPACITOR	CEAS100M50
	C917, 918	ELECT. CAPACITOR	CEASR47M50
	C919	CERAMIC CAPACITOR	CGCYF473Z50
	C921	CERAMIC CAPACITOR	CGCYF473Z50
	C1001	ELECT. CAPACITOR	CEAS221M50
	C1004	ELECT. CAPACITOR	CEAS330M35
	C1007	ELECT. CAPACITOR	CEAS472M16
	C1008	CERAMIC CAPACITOR	CGCYF473Z50
	C1010	ELECT. CAPACITOR	CEAS102M10
	C1011	ELECT. CAPACITOR	CEAS472M25
	C1013	ELECT. CAPACITOR	CEAS331M16
	C1015	ELECT. CAPACITOR	CEAS331M16
	C1016	ELECT. CAPACITOR	CEAS100M50
	C1018	ELECT. CAPACITOR	CEAS220M50
	C1020-1023	CERAMIC CAPACITOR	CGCYF473Z50
	C1024	ELECT. CAPACITOR	CEAS470M16
	C1030	CERAMIC CAPACITOR	CGCYF473Z50
⚠	C1203	CAPACITOR (0.01/400)	RCG-009
	C1601, 1602	ELECT. CAPACITOR	CEASR22M50
	C1603, 1604	ELECT. CAPACITOR	CEAS101M16
	C1605	ELECT. CAPACITOR	CEAS331M16
	C1606	CERAMIC CAPACITOR	CKCYF103Z50
	C1607	CERAMIC CAPACITOR	CGCYF473Z50
	C1701	CERAMIC CAPACITOR	CGCYF473Z50

RESISTORS

	R101-114	CARBONFILM RESISTOR	RD1/6PM□□□J
	R117-120	CARBONFILM RESISTOR	RD1/6PM□□□J
	R125, 126	CARBONFILM RESISTOR	RD1/6PM□□□J
	R135, 136	CARBONFILM RESISTOR	RD1/6PM□□□J
	R161-164	CARBONFILM RESISTOR	RD1/6PM□□□J
	R166	CARBONFILM RESISTOR	RD1/6PM□□□J
	R255-258	CARBONFILM RESISTOR	RD1/6PM□□□J
	R260-262	CARBONFILM RESISTOR	RD1/6PM□□□J
	R265, 266	CARBONFILM RESISTOR	RD1/6PM□□□J
	R270	CARBONFILM RESISTOR	RD1/6PM□□□J
	R272	CARBONFILM RESISTOR	RD1/6PM□□□J
	R276-278	CARBONFILM RESISTOR	RD1/6PM□□□J
	R299	CARBONFILM RESISTOR	RD1/6PM□□□J
	R321, 322		RCN1024
	R323-328	CARBONFILM RESISTOR	RD1/6PM□□□J
	R332	CARBONFILM RESISTOR	RD1/6PM□□□J
	R340, 341	CARBONFILM RESISTOR	RD1/6PM□□□J
	R351-391	CARBONFILM RESISTOR	RD1/6PM□□□J
	R393-398	CARBONFILM RESISTOR	RD1/6PM□□□J
	R451	CARBONFILM RESISTOR	RD1/2LF□□□J
	R454-457	CARBONFILM RESISTOR	RD1/6PM□□□J
	R459, 460	CARBONFILM RESISTOR	RD1/6PM□□□J
	R461	CARBONFILM RESISTOR	RD1/2LF□□□J
	R462-465	CARBONFILM RESISTOR	RD1/6PM□□□J
	R467-469	CARBONFILM RESISTOR	RD1/6PM□□□J
	R475	CARBONFILM RESISTOR	RD1/6PM□□□J
	R477	CARBONFILM RESISTOR	RD1/6PM□□□J
	R501	RESISTOR ARRAY (22K)	RA4T□□□J
	R504-509	CARBONFILM RESISTOR	RD1/6PM□□□J
	R510	RESISTOR ARRAY(22K)	RA8T□□□J
	R512	RESISTOR ARRAY (68K)	RA6T□□□J
	R515	CARBONFILM RESISTOR	RD1/6PM□□□J
	R517	CARBONFILM RESISTOR	RD1/6PM□□□J
	R518	RESISTOR ARRAY	RA11T□□□J
	R520	CARBONFILM RESISTOR	RD1/6PM□□□J
	R524-529	CARBONFILM RESISTOR	RD1/6PM□□□J
	R533, 534	CARBONFILM RESISTOR	RD1/6PM□□□J
	R551-553	CARBONFILM RESISTOR	RD1/6PM□□□J
	R557-561	CARBONFILM RESISTOR	RD1/6PM□□□J
	R563, 564	CARBONFILM RESISTOR	RD1/6PM□□□J
	R651-659	CARBONFILM RESISTOR	RD1/6PM□□□J
	R701-704	CARBONFILM RESISTOR	RD1/6PM□□□J
	R707-730	CARBONFILM RESISTOR	RD1/6PM□□□J
	R733-738	CARBONFILM RESISTOR	RD1/6PM□□□J
	R741, 742	CARBONFILM RESISTOR	RD1/6PM□□□J
	R760-764	CARBONFILM RESISTOR	RD1/6PM□□□J
	R766-768	CARBONFILM RESISTOR	RD1/6PM□□□J
	R770-775	CARBONFILM RESISTOR	RD1/6PM□□□J
	R804		RCN1053
	R805	METALFILM RESISTOR	RN1/6PQ□□□□F
	R806	CARBONFILM RESISTOR	RD1/6PM□□□J
	R809, 810	CARBONFILM RESISTOR	RD1/6PM□□□J
	R816	CARBONFILM RESISTOR	RD1/6PM□□□J
	R818, 819	CARBONFILM RESISTOR	RD1/6PM□□□J
	R854		RCN1053
	R855	METALFILM RESISTOR	RN1/6PQ□□□□F
	R856	CARBONFILM RESISTOR	RD1/6PM□□□J
	R859-861	CARBONFILM RESISTOR	RD1/6PM□□□J
	R866	CARBONFILM RESISTOR	RD1/6PM□□□J
	R903	CARBONFILM RESISTOR	RD1/6PM□□□J
	R915-923	CARBONFILM RESISTOR	RD1/6PM□□□J
	R926, 927	CARBONFILM RESISTOR	RD1/6PM□□□J
	R941, 942	CARBONFILM RESISTOR	RD1/6PM□□□J
	R1001	CARBONFILM RESISTOR	RD1/2LF□□□J
	R1003, 1004	CARBONFILM RESISTOR	RD1/6PM□□□J
	R1007-1012	CARBONFILM RESISTOR	RD1/6PM□□□J
	R1014-1019	CARBONFILM RESISTOR	RD1/6PM□□□J
⚠	R1020	FUSLIBLE RESISTOR	RFA1/4L□□□J
	R1021	METAL OXIDE RESISTOR	RS2LMF□□□J
	R1151-1161	CARBONFILM RESISTOR	RD1/6PM□□□J
	R1163-1165	CARBONFILM RESISTOR	RD1/6PM□□□J
	R1601-1606	CARBONFILM RESISTOR	RD1/6PM□□□J
	R1609	METAL OXIDE RESISTOR	RS2LMF□□□J
	R1611-1613	CARBONFILM RESISTOR	RD1/6PM□□□J
	R1701	RESISTOR ARRAY	RA5T□□□J
	R1702	LADDER RESISTOR	RCX1020
	R1703, 1704	CARBONFILM RESISTOR	RD1/6PM□□□J
	VR101-104	VR	RCP1046
	VR321, 322	VR	RCP1046
	VR551	VR	RCP1046

Mark	No.	Description	Part No.
	VR553	VR	RCP1046
	VR651, 652	VR	RCP1046
	VR802	VR	RCP1090
	VR851	VR	RCP1045
	VR852	VR	RCP1090
OTHERS			
	CN801	CONNECTOR(12P)	KPE12
	CN851	CONNECTOR(14P)	KPE14
	CN906	CONNECTOR	HLEM24S-1
	JA701	JACK	RKB-020
	JA902, 903	JACK	RKN1004
	JA1602	JACK	PKN1005
	X501	CERAMIC RESONATOR	VSS1014

H. PHONE UNIT

Mark	No.	Description	Part No.
CAPACITORS			
	C2020	CERAMIC CAPACITOR	CGCYF473Z50
RESISTORS			
	R2019, 2020	CARBONFILM RESISTOR	RD1/6PM□□□J
OTHERS			
	JA2003	JACK	RKN1002

OPERATE 1 UNIT

Mark	No.	Description	Part No.
SWITCHES			
	S1301-1303	SWITCH	RSG1033
	S1305, 1306	SWITCH	RSG1033

OPERATE 2 UNIT

Mark	No.	Description	Part No.
SWITCHES			
	S1401-1403	SWITCH	RSG1033
	S1405, 1406	SWITCH	RSG1033

DISPLAY UNIT

Mark	No.	Description	Part No.
SEMICONDUCTORS			
	Q1501	DIGITAL TRANSISTOR	DTA114TS
	D1501-1508	DIODE	1SS254
	D1510-1514	DIODE	1SS254
	D1517, 1518	DIODE	1SS254
SWITCHES			
	S1504-1506	SWITCH	RSG1034
	S1508	SWITCH	RSG1034
	S1510-1516	SWITCH	RSG1034
	S1518	SWITCH	RSG1034
	S1521-1524	SWITCH	RSH1014
RESISTORS			
	R513, 514	CARBONFILM RESISTOR	RD1/6PM□□□J
	R1501	CARBONFILM RESISTOR	RD1/6PM□□□J
	R2015, 2016	CARBONFILM RESISTOR	RD1/6PM□□□J
	VR2002	VARIABLE RESISTOR	RCV1086
OTHERS			
	CN907	CONNECTOR 24P	52492-2420
	V1501		RAW1106

TR SEC UNIT

There is no supply part in this unit.

8. ADJUSTMENTS

8.1 MECHANICAL ADJUSTMENT

8.1.1 Door Damping Check and Adjustment

Set the door spring of DECK 1 side to position (A) as shown in Fig. 8-1. Then, erect the front panel assembly vertically.
Open the doors of DECK 1 and DECK 2 at the same time. At this point, confirm that the difference between opening degree of both doors is within 15mm when one side of the door is opened completely. When this standard is not satisfied, change the door spring installation position of Deck 1 and perform the adjustment as follows:

- When the opening action of the door of DECK 1 is later than that of DECK 2: Change the door spring of DECK 2 from A to B.
- When the opening action of the door of DECK 1 is faster than that of DECK 2: Change the door spring of DECK 1 from A to B.

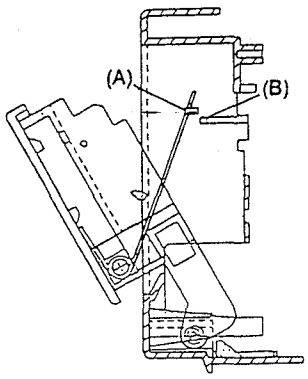

Fig. 8–1

8.1.2 Tape Speed

- Perform this adjustment in the test mode.
- TEST mode setting.

1. Set the REV MODE to " ⇄ ".
2. Short-circuit the JP901 and JP902 for a moment. (Set into TEST mode.)
3. The speed becomes normal when the PLAY key is pressed, and double when the FF key is pressed.
4. To cancel the TEST mode, press the DECK I COUNTER RESET key or turn off the power.

1. Tape Speed Adjustment and Check

No.	Deck	Mode	Test tape	Adjusting points	Specifications/Ratings (playback frequency)	Remarks
1	I	Double speed PLAY	STD-301 (3 kHz)	check	6000 Hz ± 600 Hz	
2	II			VR851	Within ± 10 Hz against the measurement value of the step 1 (deck I)	
3	I	NORMAL speed PLAY		VR802	3000 Hz ± 5 Hz	
4	II			VR801	Within ± 5 Hz against the measurement value of the step 3 (deck I)	

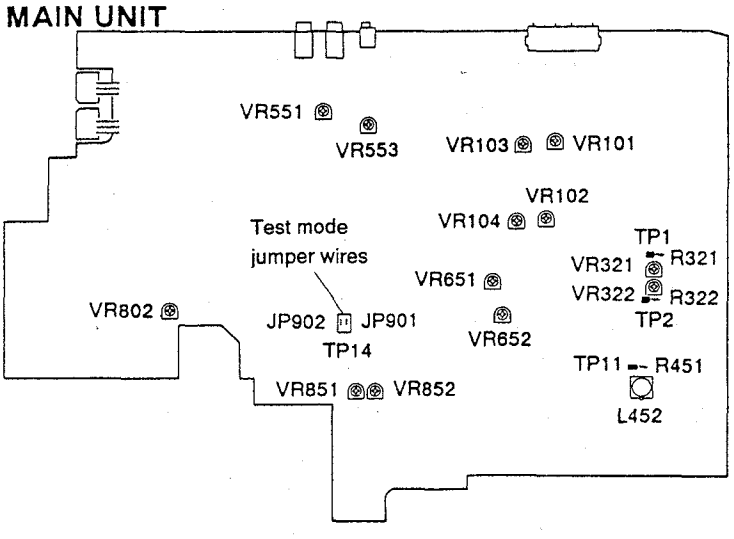

Fig. 8–2 Adjusting points

8.2 ELECTRICAL ADJUSTMENTS

Adjustment Conditions

1. The mechanical adjustments must be completed first.
2. The head must be cleaned and demagnetized.
3. Turn power on allow the deck to warm up for at least a few minutes before commencing any electrical adjustments.
4. The reference signal is 0 dBV=1 Vrms.
5. Connect a 50 kΩ (or between 47k to 52 kΩ) load resistance to the OUTPUT terminals.
6. Unless otherwise specified, the switches listed below are left in the positions indicated.
   DOLBY NR : OFF
   TAPE SELECTOR : NORM

Test Tapes

STD–331E	: Playback adjustments (See Fig. 8–3)
STD–631	: NORMAL blank tape
STD–621	: CrO_2 blank tape
STD–610	: METAL blank tape

* As the reference recording level is 250 nwb/m for STD–331E, the recording level will be higher by 4 dB for STD–331B (160 nwb/m). When adjusting, pay carefull attention to the type of tape used.

List of Adjustments

Playback sections

1. Head azimuth adjustment.
2. Playback level adjustment.

Recording sections

1. Bias oscillator adjustment.
2. Recording bias adjustment.
3. Recording level adjustment.
4. Level meter check.
5. AUTO BLE adjustment.

NOTE: This unit has an automatic tape selection feature.

Dolby noise reduction and HX Pro headroom extension manufactured under license from Dolby Laboratories Licensing Corporation. HX Pro originated by Bang & Olufsen.
"DOLBY",the double-D symbol DD and "HX PRO"are trademarks of Dolby Laboratories Licensing Corporation.

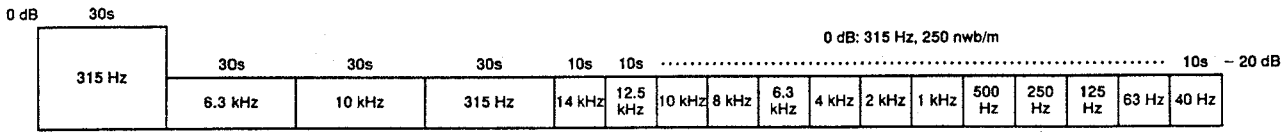

Fig. 8–3 Constants of the test tape STD–331E

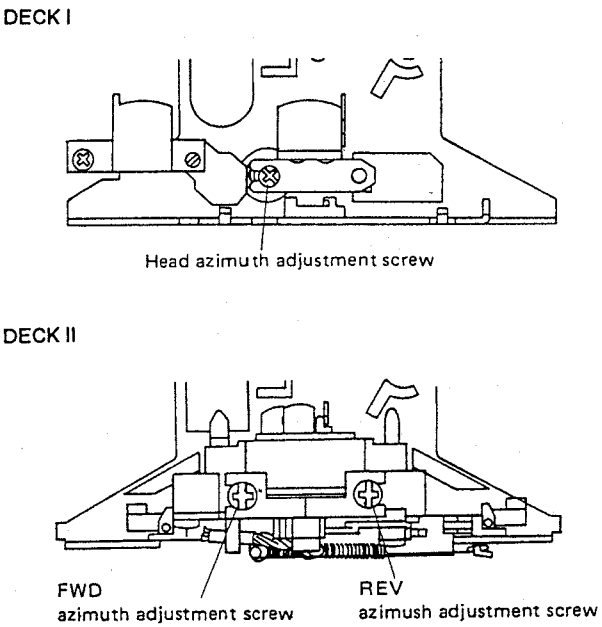

Fig. 8–4 Head azimuth adjustment

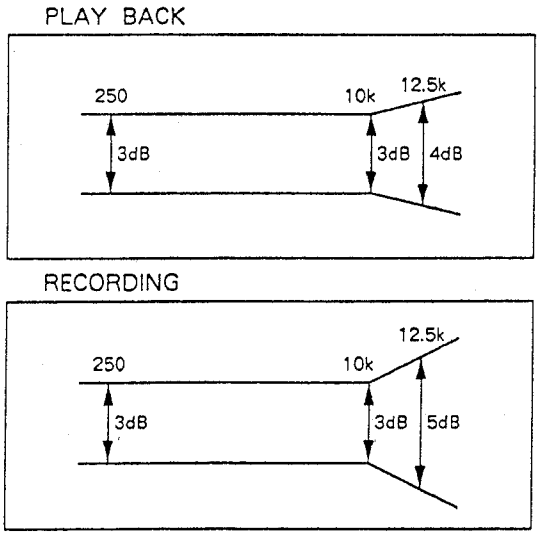

Fig. 8–5 Frequency response zone

PLAYBACK SECTION

1. Head Azimuth Adjustment

- Turn VR103, 104 (Deck I) or VR101, 102 (Deck II) to mechanical center positions.

No.	Mode	Input signal & test tape	Adjustment location	Measuring location	Adjustment value	Remarks
1.	PLAY	Play the 10 kHz/–20 dB section of STD–331E test tape.	Head azimuth adjustment screw. (See Fig. 8–4)	LINE OUT	Maximum playback signal level.	
2.	STOP	Lock the screw with screw lock after completing adjustment.				

2. Playback Level Adjustment

- This adjustment determines the DOLBY NR level, and must be performed with great care.

No.	Mode	Input signal & test tape	Adjustment location		Measuring location	Adjustment value	Remarks
1.	PLAY	Play the 315 Hz/0 dB section of the STD–331E test tape.	Deck I	VR 103 (Lch) VR 104 (Rch)	TP. 1 (Lch) TP. 2 (Rch)	–6.7 dBV	
			Deck II	VR 101 (Lch) VR 102 (Rch)			

RECORDING SECTION

1. Bias Oscillator Adjustment

No.	Mode	Input signal & test tape	Adjustment location		Measuring location	Adjustment value	Remarks
1.	REC	Load the STD–610 test tape with no input signal.	Deck II	L 452	TP. 11	105 kHz ± 0.3kHz	If the adjustment value on the left cannot be obtained values within 105kHz $\pm^{4}_{0.3}$ kHz are also satisfactory.

2. Recording Bias Adjustment

- After the adjustment, caution should be exercised so as not to become under bias by checking the distortion rate.

No.	Mode	Input signal & test tape	Adjustment location		Measuring location	Adjustment value	Remarks
1.	REC	Record the 315 Hz and 6.3 kHz signals at –26 dBV input level and playback. (STD-631)	Deck II	VR651 (Lch) VR652 (Rch)	LINE OUT	Repeatedly record, playback and adjust so that the plyaback level of 6.3 kHz signal becomes 0 dB ± 0.5 dB when compared with the 315 Hz signal.	

3. Recording Level Adjustment

No.	Mode	Input signal & test tape	Adjustment location		Measuring location	Adjustment value	Remarks
1.	REC PAUSE	Apply a 315 Hz/0 dBV signal to the line input terminals, load the STD-631 test tape.	REC level control volume		TP. 1 (Lch) TP. 2 (Rch)	-11.2 dBV	
2.	STOP	Set the DOLBY NR switch to the ON position.					
3.	REC/ PLAY	Record the above signal onto the STD-631 test tape, and playback.	Deck II	VR321 (Lch) VR322 (Rch)	TP. 1 (Lch) TP. 2 (Rch)	Repeatedly record, playback and adjust so that the playback signal level becomes − 11.2 dBV.	
4.	REC/ PLAY	Record the above signal onto the STD-621 test tape, and playback.	Check		TP. 1 (Lch) TP. 2 (Rch)	-11.2 dBV ± 1.5dB	
5.	REC/ PLAY	Record the above signal onto the STD-610 test tape, and playback.	Check		TP. 1 (Lch) TP. 2 (Rch)	-11.2 dBV ± 1.5dB	

4. Level Meter Check

No.	Mode	Input signal & test tape	Adjustment location	Measuring location	Adjustment value	Remarks
1.	REC PAUSE	Apply a 315 Hz/-10 dBV (316 mV) signal to the Line Input terminals.	REC level control volume	TP. 1 (Lch) TP. 2 (Rch)	Check that the level meters "0 dB" light up within -7.2 dBV ± 2 dB of the signal output level.	

5. AUTO BLE Adjustment

- BLE adjustment should be performed after all other adjustments are completed.
- This adjustment should be performed in the test mode.
- Entering the test mode.
  For details of how to enter the test mode, refer to the "Mechanical Adjustment" section (Page 29)

No.	Mode	Input signal & test tape	Adjustment location	Measuring location	Adjustment value	Remarks
1.	–	Set to test mode.	–	–	–	
2.		Press the NORMAL SPEED key on the front panel.	Level meter	VR551	Adjust so that − 1 dB on the level meter turn on and off.	400 Hz adjustment
3.		Press the HIGH SPEED key on the front panel.		VR553		10 kHz adjustment

Reference: The output of LINE OUT after completing the adjustments for 400 Hz, 10 kHz, 3 kHz becomes − 26 dBV ± 1dB.

8. REGLAGES

8.1 REGLAGE MÉCANIQUE

8.1.1 Contrôle et Réglage de l'Amortisseur de Trappe

Placer le ressort de trappe du côté de la platine 1 sur la position (A) comme indiqué dans la Fig. 8-1. Redresser ensuite l'ensemble de panneau avant verticalement.

Ouvrir les trappes de la platine 1 et de la platine 2 en même temps. A ce point, s'assurer que la différence entre le degré d'ouverture des deux trappes est de moins de 15mm lorsqu'un côte de la trappe est complètement ouvert. Lorsque cette valeur est différente de la valeur standard mentionnée, changer la position de mise en place du ressort de trappe de la platine 1 et effectuer un réglage comme suit:

- Lorsque l'action d'ouverture de la trappe de la platine 1 se fait plus lentement que celle de la platine 2: Changer le ressort de la trappe de la platine 2 de A à B.
- Lorsque l'action d'ouverture de la trappe de la platine 1 se fait plus rapidement que celle de la platine 2: Changer le ressort de la trappe de la platine 1 de A à B.

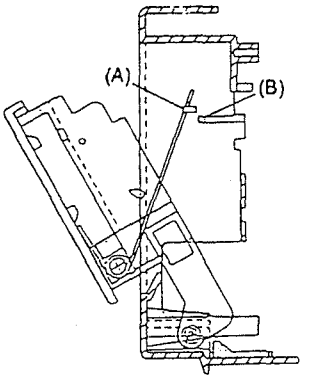

Fig. 8–1

8.1.2 Vitesse de défilement de la bande

- Régler au mode TEST.
- Réglage du mode TEST.

1. Régler le sélecteur REV MODE à "⇄".
2. Court-circuiter JP901 et JP902 un moment. (Régler au mode TEST.)
3. La vitesse devient normale à la pression de la touche PLAY, et double à la pression de la touche FF.
4. appuyer sur la touche DECK I COUNTER RESET ou mettre hors tension pour annuler le mode TEST.

1. Réglage et contrôle de la vitesse de défilement de la bande

No.	Platine	Mode	Bande testée	Points de réglage	Spécifications/valeurs nominales (fréquence de lecture)	Remarques
1	I	PLAY double vitesse	STD-301 (3 kHz)	contrôl	6000 Hz ± 600 Hz	
2	II			VR851	Moins de ± 10 Hz par rapport à la valeur mesurée à l'étape 1 (platine I)	
3	I	PLAY vitesse normale		VR802	3000 Hz ± 5 Hz	
4	II			VR801	Moins de ± 5 Hz par rapport à la valeur mesurée à l'étape 3 (platine I)	

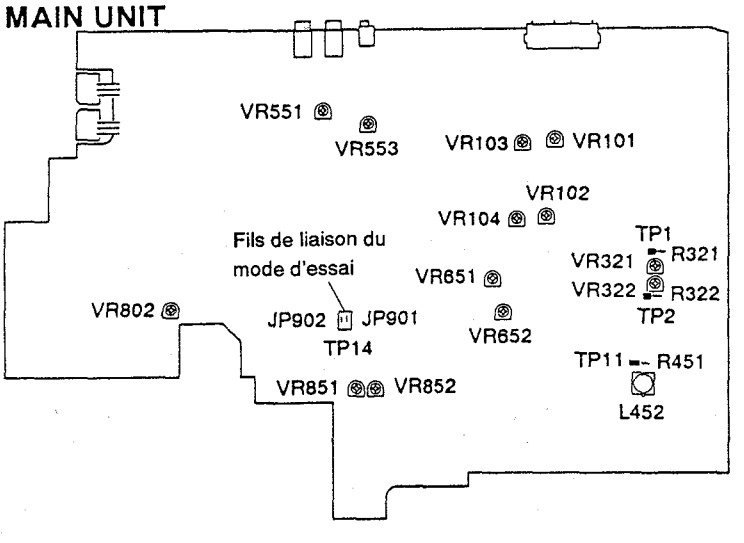

Fig. 8–2 Points réglage

8.2 REGLAGES ELECTRIQUES

Conditions de réglage

1. Les réglages mécaniques doivent tout d'abord être terminés.
2. Les têtes doivent être nettoyées et démagnétisées.
3. Mettre la platine sous tension et la laisser chauffer pendant au moins quelques minutes avant de commencer les réglages électriques.
4. Le signal de référence est de 0 dBV=1 Vrms.
5. Connecter une résistance de charge de 50 kΩ (tolérance 47k à 52 kΩ) aux bornes de sortie (OUTPUT).
6. Sauf indication contraire, les commutateurs ci-dessous doivent être laissés sur les positions indiquées.
   DOLBY NR : OFF
   Sélecteur de bande (TAPE SELECTOR) : NORM

Bandes d'essai

STD-331E	: Réglages de la lecture (Voir fig. 8-3)
STD-631	: Bande vierge de type normal
STD-621	: Bande vierge de type chrome
STD-610	: Bande vierge de type métal

* Le niveau d'enregistrement de référence étant de 250 nwb/m pour le STD-331E, le niveau d'enregistrement sera supérieur de 4 dB pour le STD-331B (160 nwb/m). Pour le réglage, tenir compte du type de bande utilisé.

Liste des réglages

Sections de lecture

1. Réglage de l'azimut de la tête.
2. Réglage du niveau de lecture.

Sections d'enregistrement

1. Réglage de l'oscillateur de polarisation.
2. Réglage de la polarisation d'enregistrement.
3. Réglage du niveau d'enregistrement.
4. Vérification de l'indicateur de niveau.
5. Réglage de AUTO BLE.

REMARQUE:
Cette unité est dotée d'une sélection automatique de bande.

Réduction de bruit Dolby et HX Pro headroom extension fabriqués sous license de Dolby Laboratories Licensing Corporation. HX Pro est d'origine Bang & Olufsen.
DOLBY, le symbole double-D DD et HX PRO sont des marques de Dolby Laboratories Licensing Corporation.

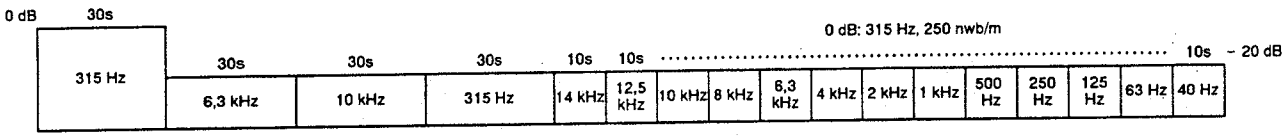

Fig. 8-3 Constantes de la bande d'essai STD-331E

Platine I

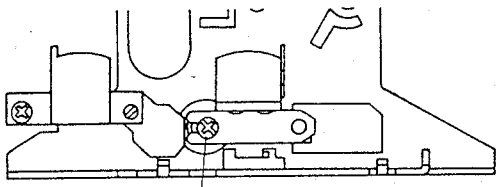

Platine II

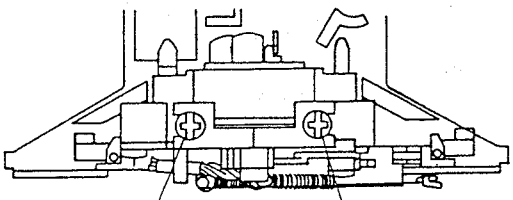

Fig. 8-4 Réglage de l'azimut de la tête

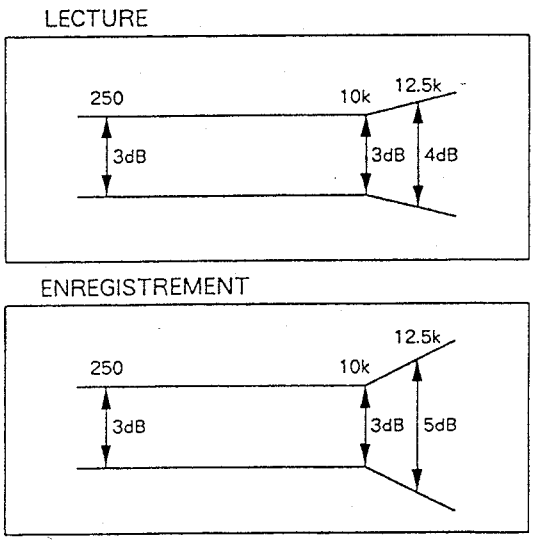

Fig. 8-5 Zone de réponse en fréquence

SECTION DE LECTURE

1. Réglage de l'azimut de la tête

- Tourner VR 103, 104 (Platine I) ou VR 101, 102 (Platine II) sur leur position centrale mécanique.

No.	Mode	Signal d'entrée et bande d'essai	Points de réglage	Points de mesure	Valeur de réglage	Remarques
1.	PLAY	Reproduire la section 10 kHz/–20 dB de la bande d'essai STD–331E.	Vis de réglage de l'azimut de la tête. (Voir fig. 8–4)	Sortie de ligne (LINE OUT)	Niveau du signal de reproduction maximum.	
2.	STOP	Verrouiller la vis avec le verrouillage de vis après avoir terminé le réglage.				

2. Réglage du niveau de lecture

- Ce réglage détermine le niveau DOLBY NR et il doit être effectué très soigneusement.

No.	Mode	Signal d'entrée et bande d'essai	Points de réglage		Points de mesure	Valeur de réglage	Remarques
1.	PLAY	Reproduire la section 315 Hz/0 dB de la bande d'essai STD–331E.	Platine I	VR103 (can. G) VR104 (can. D)	TP. 1 (can. G) TP. 2 (can. D)	–6.7 dBV	
			Platine II	VR101 (can. G) VR102 (can. D)			

SECTION D'ENREGISTREMENT

1. Réglage de l'oscillateur de polarisation

No.	Mode	Signal d'entrée et bande d'essai	Points de réglage		Points de mesure	Valeur de réglage	Remarques
1.	REC	Charger la bande d'essai STD–610 et n'introduire aucun signal.	Platine II	L 452	TP. 11	105 kHz ± 0.3 kHz	Si la valeur de réglage de gauche ne peut pas être obtenue, des valeurs de 105kHz $\pm^{4}_{0.3}$ kHz sont également acceptables.

2. Réglage de la polarisation d'enregistrement

- Après le réglage, des précautions doivent être prises pour éviter une sous–polarisation en vérifiant le taux de distorsion.

No.	Mode	Signal d'entrée et bande d'essai	Points de réglage		Points de mesure	Valeur de réglage	Remarques
1.	STOP	Enregistrer les signaux 315 Hz et 6,3 kHz à un niveau d'entrée de –26 dBV et les reproduire. (STD – 631)	Platine II	VR651 (can. G) VR652 (can. D)	Sortie de ligne (LINE OUT)	Enregistrer, reproduire et régler de manière répétée de sorte que le niveau de lecture du signal 6,3 kHz devienne 0 dB ± 0.5 dB lorsqu'il est comparé avec le signal 315 Hz.	

3. Réglage du niveau d'enregistrement

No.	Mode	Signal d'entrée et bande d'essai	Points de réglage		Points de mesure	Valeur de réglage	Remarques
1.	REC PAUSE	Appliquer un signal de 315 Hz/0 dBV aux bornes d'entrée de ligne, charger la bande d'essai STD-631.	Volume de la commande de niveau d'enregistrement.		TP. 1 (can. G) TP. 2 (can. D)	-11.2 dBV	
2.	STOP	Régler le commutateur DOLBY NR sur la position ON. (DOLBY B)					
3.	REC/ PLAY	Enregistrer le signal cidessus sur la bande d'essai STD-631 et le reproduire.	Platine II	VR321 (Lch) VR322 (Rch)	TP. 1 (can. G) TP. 2 (can. D)	Enregistrer, reproduire et régler de manière répétée de sorte que le niveau du signal devienne − 11.2 dBV.	
4.	REC/ PLAY	Enregistrer le signal cidessus sur la bande d'essai STD-621 et le reproduire.	Vérifier		TP. 1 (can. G) TP. 2 (can. D)	-11.2 dBV ± 1.5 dB	
5.	REC/ PLAY	Enregistrer le signal cidessus sur la bande d'essai STD-610 et le reproduire.	Vérifier		TP. 1 (can. G) TP. 2 (can. D)	-11.2 dBV ± 1.5 dB	

4. Vérification de l'indicateur de niveau

No.	Mode	Signal d'entrée et bande d'essai	Points de réglage	Points de mesure	Valeur de réglage	Remarques
1.	REC PAUSE	Appliquer un signal de 315 Hz/-10 dBV (316 mV) aux bornes d'entrée de ligne.	Volume de la commande de niveau d'enregistrement	TP. 1 (can. G) TP. 2 (can. D)	Vérifier que les indicateurs de niveau "0 dB" s'allument dans la limite de -7.2 dBV ± 2 dB du niveau de sortie du signal.	

5. Réglage de AUTO BLE

- Leréglage BLE doit être effectué après que tous les autres réglages sont complétés.
- Ce réglage doit être effectué dans le mode d'essai.
- Passage au mode d'essai.
  Pour les détails du passage en mode d'essai, voir la section "Réglages mécaniques" (Page 33).

No.	Mode	Signal d'entrée et bande d'essai	Points de réglage	Points de mesure	Valeur de réglage	Remarques
1.	-	Régler dans le mode d'essai.	-	-	-	
2.		Appuyer sur la touche NORMAL SPEED du panneau avant.	L'indicateur de niveau	VR551	Régler de sorte que − 1 dB sur l'indicateur de niveau s'allume et s'éteigne.	Réglage 400 Hz
3.		Appuyer sur la touche HIGH SPEED du panneau avant.		VR553		Réglage 10 kHz

Référence: Après l'achèvement des réglages pour 400 Hz, 10 kHz et 3 kHz, la sortie de LINE OUT devient − 26 dBV ± 1 dB.

8. AJUSTES

8.1 AJUSTE MECANICO

8.1.1 Comprobación y ajuste de la amortiguación de la puerta

Ajuste el resorte de la puerta del DECK 1 en la posición (A) como se muestra en la Fig. 8-1. Luego, levante el conjunto del panel frontal en forma vertical. Abra las puertas de los DECK 1 y DECK 2 al mismo tiempo.

Entonces, confirme que la diferencia entre el grado de abertura de ambas puertas sea de 15mm como máximo cuando se abre por completo un lado de la puerta. Cuando no se satisfacen estas medidas, cambie la posición de instalación del resorte de la puerta del DECK 1 y efectúe el ajuste del modo siguiente:

- Cuando la acción de abrir la puerta del DECK 1 es más retardada que la del DECK 2: Cambie el resorte de la puerta del DECK 2 de A a B.
- Cuando la acción de abrir la puerta del DECK 1 es más rápida que la del DECK 2: Cambie el resorte de la puerta del DECK 1 de A a B.

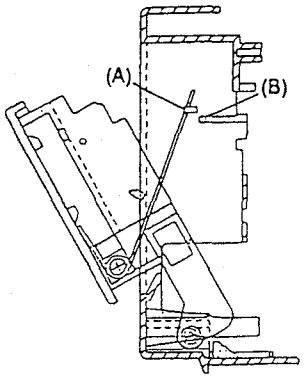

Figura. 8–1

8.1.2 Velocidad de la Cinta

- Realice este ajuste en el modo de prueba.
- Ajuste del modo TEST.

1. Ajuste el REV MODE en "⇄".
2. Cortocircuite JP901 y JP902 durante un momento.(Ajuste en el modo TEST)
3. La velocidad es normal cuando se oprime la tecla PLAY, y doble cuando se oprime la tecla FF.
4. Para cancelar el modo TEST, oprima la tecla DECK I COUNTER RESET o desconecte la alimentación.

1. Ajuste y Verificación de la Velocidad de la Cinta

No.	Unidad	Modo	Cinta de prueba	Puntos de ajuste	Especificaciones/Valores nominales (frecuencia de reproducción)	Observaciones
1	I	PLAY a velocidad doble	STD-301 (3 kHz)	Verificar	6000 Hz ± 600 Hz	
2	II			VR851	Dentro de ± 10 Hz contra el valor de medición del paso 1 (unidad I)	
3	I	PLAY a velocidad normal		VR802	3000 Hz ± 5 Hz	
4	II			VR801	Dentro de ± 5 Hz contra el valor de medición del paso 3 (unidad I)	

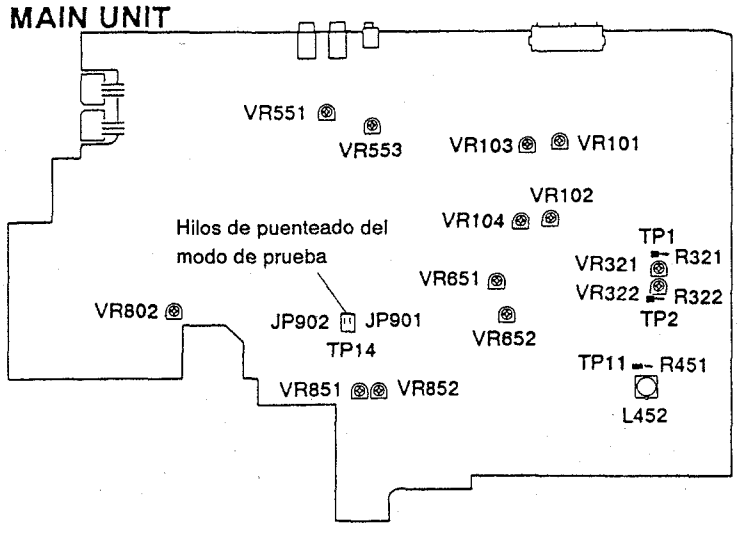

Figura. 8–2 Puntos de ajuste

8.2 AJUSTES ELÉCTRICOS

Condiciones de ajuste

1. Los ajustes mecánicos deben haberse completado primero.
2. La cabeza debe estar limpia y desmagnetizada.
3. Encienda la alimentación para permitir que la platina se caliente durante unos pocos minutos por lo menos antes de realizar cualquier ajuste eléctrico.
4. La señal de referencia es de 0 dBV=1 Vrms.
5. Conecte una resistencia de 50 kΩ (o entre 47k y 52 kΩ) en los terminales OUTPUT.
6. A menos que se especifique lo contrario, los conmutadores indicados más abajo deben dejarse en las posiciones indicadas.
   DOLBY NR : OFF
   TAPE SELECTOR : NORM

Cintas de prueba

STD–331E : Ajustes de reproducción (Consulte la figura 8–3)
STD–631 : Cinta virgen NORMAL
STD–621 : Cinta virgen de CrO_2
STD–610 : Cinta virgen de METAL

* Como el nivel de grabación de referencia es igual a 250 nwb/m para el STD–331E, el nivel de grabación será 4 dB mayor para el STD–331B (160 nwb/m). Al realizer el ajuste, preste suma atención al tipo de cintá que se está utilizando.

Lista de ajustes

Secciones de reproducción

1. Ajuste de azimut de la cabeza
2. Ajuste del nivel de reproducción

Secciones de grabación

1. Ajuste del oscillador de polarización
2. Ajuste de la polarización de grabación
3. Ajuste del nivel de grabación
4. Verificación del medidor de nivel
5. Ajuste AUTO BLE

NOTA:
Esta unidad posee una función de selección automática de cinta.

Reduccion de ruido Dolby y HX Pro headroom extension fabricados bajo licencia de Dolby Laboratories Licensing Corporation. HX Pro producido por Bang & Olufsen.
DOLBY, el símbolo de la D doble DD y HX PRO son marcas de Dolby Laboratories Licensing Corporation.

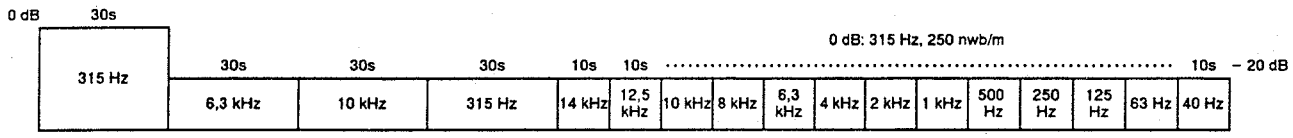

Figura 8–3 Constantes de la cinta de prueba STD–331E

Platina I

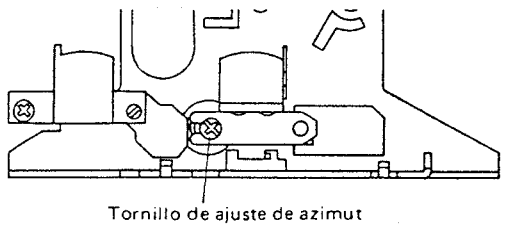

Platina II

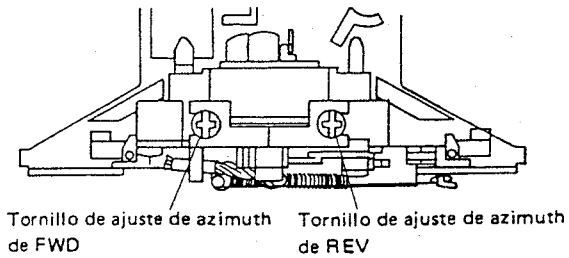

Figura 8–4 Ajuste de azimut de la cabeza

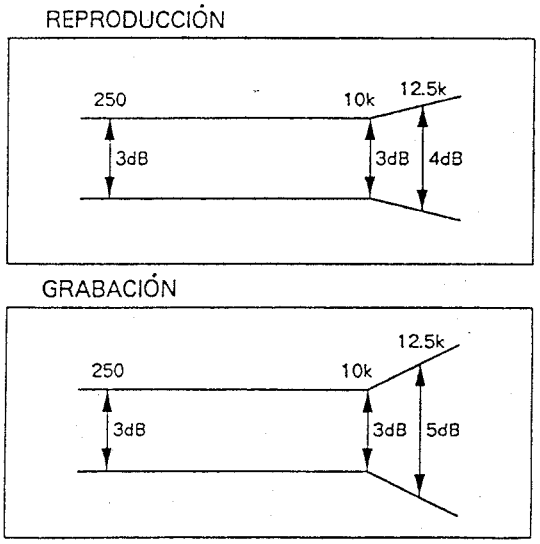

Figura 8–5 Zona de respuesta de frecuencia

SECCIÓN DE REPRODUCCIÓN

1. Ajuste del azimut de la cabeza

- Poner VR103, 104 (platina I) o VR101, 102 (platina II) en las posiciones del centro mecánico.

N.º	Modo	Señal de entrada y cinta de prueba	Punto de ajuste	Punto de medición	Valor de ajuste	Comentarios
1.	PLAY	Reproduzca la sección de 10 kHz/–20 dB de la cinta de prueba STD–331E.	Tornillo de ajuste del azimut de la cabeza. (Vea la figura 8–4)	LINE OUT	Nivel máximo de la señal de reproducción.	
2.	STOP	Bloquee el tornillo con su cierre una vez finalizado el ajuste.				

2. Ajuste del nivel de reproducción

- Este ajuste determina el nivel DOLBY NR y debe realizarse con mucho cuidado.

N.º	Modo	Señal de entrada y cinta de prueba	Punto de ajuste		Punto de medición	Valor de ajuste	Comentarios
1.	PLAY	Produzca la parte de 315 Hz/0 dB de la cinta de prueba STD–331E.	Platina I	VR103 (Lch) VR104 (Rch)	TP. 1 (Lch) TP. 2 (Rch)	–6.7 dBV	
			Platina II	VR101 (Lch) VR102 (Rch)			

SECCIÓN DE GRABACIÓN

1. Ajuste del oscilador de polarización

N.º	Modo	Señal de entrada y cinta de prueba	Punto de ajuste		Punto de medición	Valor de ajuste	Comentarios
1.	REC	Introduzca la cinta de prueba STD–610 sin señal de entrada.	Platina II	L 452	TP. 11	105kHz ± 0.3kHz	Si no fuera posible obtener el valor de ajuste que se indica a la izquierda, valores comprendidos entre 105 kHz $\pm^{4}_{0.3}$ kHz son también satisfactorios.

2. Ajuste de polarización de grabación

- Una vez finalizado el ajuste, compruebe el porcentaje de distorsión para no obtener subpolarización.

N.º	Modo	Señal de entrada y cinta de prueba	Punto de ajuste		Punto de medición	Valor de ajuste	Comentarios
1.	REC	Grabe la señal de 315 Hz y 6,3 kHz a un nivel de entrada de –26 dBV y reprodúzcala. (STD – 631)	Platina II	VR651 (Lch) VR652 (Lch)	LINE OUT	Grabe, reproduzca y ajuste repetidamente para que el nivel de la señal de reproducción de 6,3 kHz sea de 0 dB ± 0.5 dB cuando se compare con la señal de 315 Hz.	

3. Ajuste del nivel de grabación

N.º	Modo	Señal de entrada y cinta de prueba	Punto de ajuste		Punto de medición	Valor de ajuste	Comentarios
1.	REC PAUSE	Aplique una señal de 315 Hz/0 dBV a los terminales de entrada de línea e introduzca la cinta de prueba STD-631.	Control de nivel de grabación.		TP. 1 (Lch) TP. 2 (Rch)	−11.2 dBV	
2.	STOP	Ponga el conmutador DOLBY NR en la posición ON. (DOLBY B)					
3.	REC/ PLAY	Grabe la señal de arriba en la cinta de prueba STD-631 y reprodúzcala.	Platina II	VR321 (Lch) VR322 (Rch)	TP. 1 (Lch) TP. 2 (Rch)	Grabe, reproduzca y ajuste repetidamente para que el nivel de la señal de reproducción sea de − 11.2 dBV.	
4.	REC/ PLAY	Grabe la señal de arriba en la cinta de prueba STD-621 y reprodúzcala.	Verifique		TP. 1 (Lch) TP. 2 (Rch)	−11.2 dBV ± 1.5dB	
5.	REC/ PLAY	Grabe la señal de arriba en la cinta de prueba STD-610 y reprodúzcala.	Verifique		TP. 1 (Lch) TP. 2 (Rch)	−11.2 dBV ± 1.5dB	

4. Verificación del medidor de nivel

N.º	Modo	Señal de entrada y cinta de prueba	Punto de ajuste	Punto de medición	Valor de ajuste	Comentarios
1.	REC PAUSE	Aplique una señal de 315 Hz/−10 dBV (316 mV) a los terminales de entrada de línea.	Control de nivel de grabación	TP. 1 (Lch) TP. 2 (Rch)	Verifique si se encienden los medidores de nivel "0 dB" cuando el nivel de salida de la señal sea −7.2 dBV ± 2 dB.	

5. Ajuste AUTO BLE

- El ajuste BLE debe efectuarse después de haber terminado todos los otros ajustes.
- Este ajuste debe efectuarse en el modo de prueba.
- Cómo establecer el modo de prueba.
  Con respecto a los detalles de cómo se entra en el modo de prueba, consulte la sección "Ajuste Mecánico" (Página 37).

N.º	Modo	Señal de entrada y cinta de prueba	Punto de ajuste	Punto de medición	Valor de ajuste	Comentarios
1.	–	Establezca el modo de prueba.	–	–	–	
2.		Pulse la tecla NORMAL SPEED del panel delantero.	En medidor de nivel	VR551	Ajuste de modo tal que − 1 dB se active y desactive en el medidor de nivel.	Ajuste de 400 Hz
3.		Pulse la tecla HIGH SPEED del panel delantero.		VR553		Ajuste de 10 kHz

Referencia: Después de completar los ajustes para 400 Hz, 10 kHz y 3 kHz, la salida de LINE OUT es igual a − 26 dBV ± 1 dB.

9. FL INFORMATION

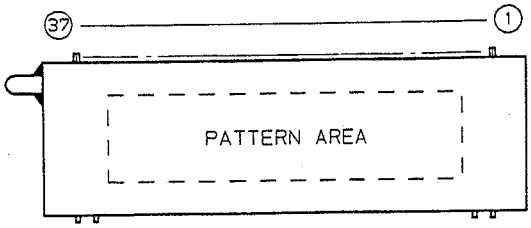

Pin Connection

PIN NO.	37	36	35	34	33	32	31	30	29	28	27	26	25	24	23	22	21	20	19	18	17	16	15	14	13	12	11	10	9	8	7	6	5	4	3	2	1
CONNECTION	F2	F2	NP	P4	P5	P3	P12	P8	P9	P10	P7	P11	P16	P6	P2	P13	P3	P15	P5	P9	P6	P8	P7	NC	G7	G6	G5	G11	G10	G9	G8	G4	G3	G2	G1	NP	F1	F1

NOTE 1) F1,F2 --- Filament
2) NP ------ No pin
3) NC ------ No connection
4) 1G~11G -- Grid

Grid Assignment

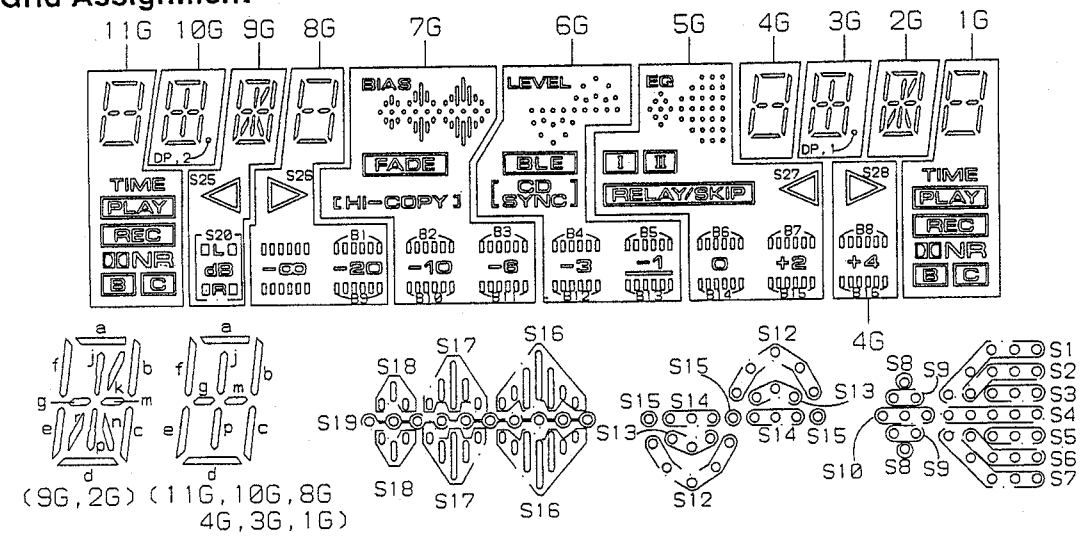

Anode Connection

	11G	10G	9G	8G	7G	6G	5G	4G	3G	2G	1G
P1	a	a	a	a	S18	S14	S4	a	a	a	a
P2	b	b	b	b	S17	S13	S2,S6	b	b	b	b
P3	c	c	c	c	[HI-]	–	RELAY/SKIP	c	c	c	c
P4	d	d	d	d	FADE	BLE	I	d	d	d	d
P5	e	e	e	e	COPY	CD SYNC	S27	e	e	e	e
P6	f	f	f	f	S16	S12	S1	f	f	f	f
P7	m	m	g,m	m	B2	B4	B6	m	m	g,m	m
P8	TIME	DP,2	k,r	S26	B10	B12	B14	S28	DP,1	k,r	TIME
P9	PLAY	j,p	n	B1	B3	B5	B7	B8	j,p	n	PLAY
P10	REC	–	S25	B9	B11	B13	B15	B16	–	–	REC
P11	g	g	–	g	–	–	–	g	g	–	g
P12	C	–	j,p	–	BIAS	LEVEL	II	–	–	j,p	C
P13	NR	–	–	–	S19	S15	EQ S10	–	–	–	–
P14	–	–	–	–	–	–	–	–	–	–	NR
P15	B	–	dB	-∞ -20	-10 -6	-3 -1	0 +2	+4	–	–	B
P16	–	–	–	–	–	–	S9	–	–	–	–
P17	–	–	–	–	–	–	S7	–	–	–	–
P18	–	–	–	–	–	–	S3,S5	–	–	–	–
P19	–	–	–	–	–	–	S8	–	–	–	–

10. FOR HEM, HB AND SD TYPES

NOTES:
- Parts marked by "NSP" are generally unavailable because they are not in our Master Spare Parts List.
- The ⚠ mark found on some component parts indicates the importance of the safety factor of the part. Therefore, when replacing, be sure to use parts of identical designation.
- Parts marked by "⊙" are not always kept in stock. Their delivery time may be longer than usual or they may be unavailable.

CT-W601R/HEM, HB, SD and CT-W601R/KUC have the same construction except for the following:

Mark	Symbol & Description	Part No.				Remarks
		CT-W601R/KUC	CT-W601R/HEM	CT-W601R/HB	CT-W601R/SD	
⊙	Mother unit	RWM1475	RWM1476	RWM1476	RWM1541	
NSP	MAIN unit	RWZ2523	RWZ2529	RWZ2529	RWZ2691	
NSP	H.PHONE unit	RWZ2524	RWZ2530	RWZ2530	RWZ2692	
NSP	OPERATE 1 unit	RWZ2525	RWZ2531	RWZ2531	RWZ2693	
NSP	OPERATE 2 unit	RWZ2526	RWZ2532	RWZ2532	RWZ2694	
NSP	DISPLAY unit	RWZ2527	RWZ2533	RWZ2533	RWZ2695	
NSP	TR SEC unit	RWZ2528	RWZ2534	RWZ2534	RWZ2696	
⚠	AC power cord	PDG1015	PDG1003	PDG1036	PDG1013	
⚠	FU1, FU2 Fuse (1.5A)	REK1001	.....	.....	.....	
⚠	FU1, FU2 Fuse (T1.6A)	.....	REK-102	REK-102	REK-102	
⚠	Power transformer (AC120V)	RTT1165	.....	.....	.....	
⚠	Power transformer (AC220-230/230-240V)	.....	RTT1166	RTT1166	.....	
⚠	Power transformer (AC110/120-127/220/240V)	.....	.....	.....	RTT1167	
⚠	Voltage selector (AC110/120-127/220/240V)	.....	.....	.....	PSB1002	
⚠	Strain relief	CM-22C	CM-22B	CM-22B	CM-22B	
	Foot assembly	PXA1201	.....	.....	.....	
	Insulator	.....	PNW1912	PNW1912	PNW1912	(For foot)
	FL lens	RAH2082	RAH2083	RAH2083	RAH2082	
⊙	Mechanism unit (Deck II)	RYM1170	RYM1173	RYM1173	RYM1170	
NSP	Capacitor sleeve A	.....	REC-150	REC-150	REC-150	(For C1203)
NSP	Rear panel	RNA1576	RNA1577	RNA1578	RNA1579	
	Packing case	RHG1373	RHG1374	RHG1374	RHG1374	
	Operating instructions (English)	RRB1120	.....	RRB1120	.....	
	Operating instructions (English/French/German/Italian/Dutch/Spanish/Portuguese/Swedish)	.....	RRE1063	.....	.....	
	Operating instructions (Spanish)	.....	.....	.....	RRD1123	

MAIN UNIT

RWZ2529, RWZ2691 and RWZ2523 have the same construction except for the following:

Mark	Symbol & Description	Part No.		Remarks
		RWZ2523	RWZ2529 and RWZ2691	
	R719, 720	RD1/6PM332J	RD1/6PM222J	

H.PHONE UNIT
Although RWZ2530, RWZ2692 and RWZ2524 are different in part number, they have the same service parts.

OPERATE 1 UNIT
Although RWZ2531,RWZ2693 and RWZ2525 are different in part number, they have the same service parts.

OPERATE 2 UNIT
Although RWZ2532, RWZ2694 and RWZ2526 are different in part number, they have the same service parts.

DISPLAY UNIT
RWZ2533 and RWZ2527 have the same construction except for the following:

Mark	Symbol & Description	Part No.		Remarks
		RWZ2527	RWZ2533	
	V1501	RAW1106	RAW1108	

Note: RWZ2695 and RWZ2527 are different in part number, they have the same service parts.

TR SEC UNIT
RWZ2534, RWZ2696 and RWZ2528 are differnt in part number, they have the same service parts.

MECHANISM UNIT (DECK II)
RYM1173 and RYM1170 have the same construction except for the following:

Mark	Symbol & Description	Part No.		Remarks
		RYM1170	RYM1173	
	Belt main	REB1159	REB1162	
	Ass'y flywheel L	RXA1423	RXA1476	
	Ass'y flywheel R	RXA1424	.....	
	Ass'y motor	RXM1052	RXM1051	
	Gear FW R	.....	RNK1733	
	Flywheel R	.....	RXA1415	

11. PANEL FACILITIES

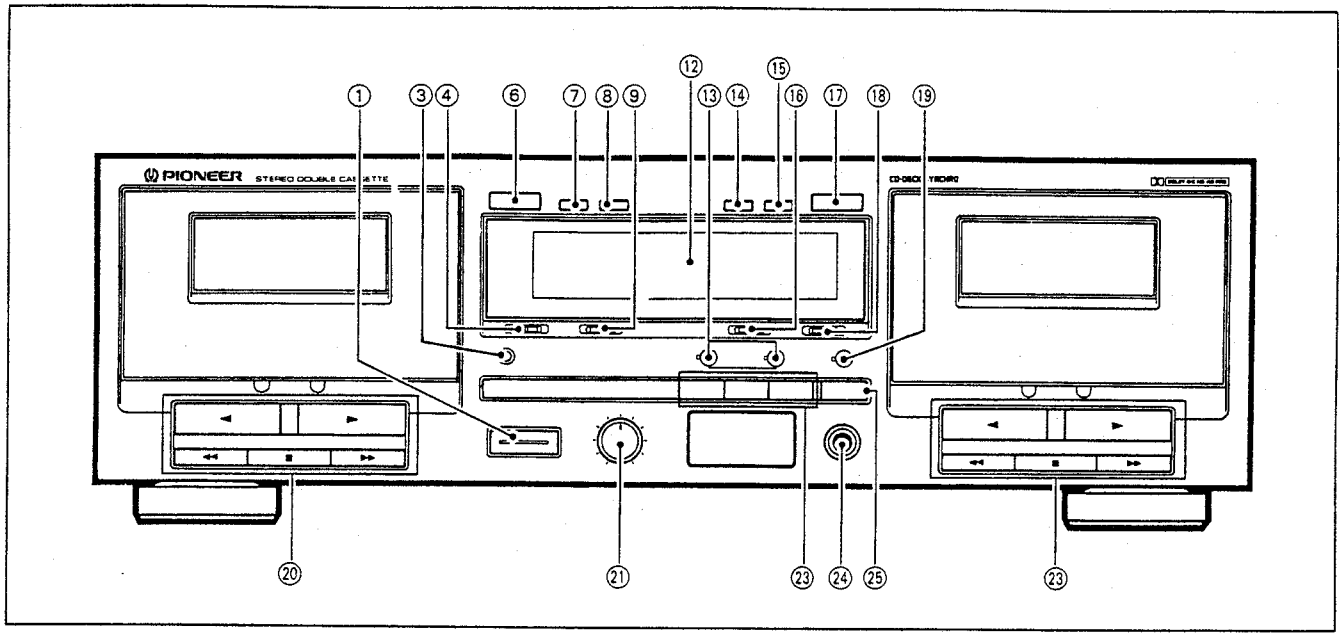

① **POWER switch (■ OFF/ ▬ ON)**
③ **RELAY/SKIP button**
④ **TIMER mode switch (REC/OFF/PLAY)**
⑥ **DECK I eject button (⏏)**
- If the tape is moving (recording, playback, tape winding etc.), press the stop (■) button before pressing this button.

NOTE:
If the power is turned off while the tape is moving, the cassette door may remain locked. In this case, turn the power on before pressing the eject (⏏) button.

⑦ **DECK I counter reset button (RESET)**
⑧ **DECK I counter mode button (TIME/COUNT)**
⑨ **Reverse mode switch (REV MODE)**
⑫ **Function display**
⑬ **Synchro copy buttons (SYNCHRO COPY I▶II)**
NORMAL SPEED: Normal speed copy
HIGH SPEED : Double speed copy

⑭ **DECK II counter reset button (RESET)**
⑮ **DECK II counter mode button (TIME/COUNT)**
⑯ **DOLBY*NR switch (B/OFF/C)**

*
- *Dolby noise reduction and HX Pro headroom extension manufactured under license from Dolby Laboratories Licensing Corporation. HX Pro originated by Bang & Olufsen.*
- *"DOLBY", the double-D symbol DD and "HX PRO" are trademarks of Dolby Laboratories Licensing Corporation.*

⑰ **DECK II eject button (⏏)**
- If the tape is moving (recording, playback, tape winding etc.), press the stop (■) button before pressing this button.

NOTE:
If the power is turned off while the tape is moving, the cassette door may remain locked. In this case, turn the power on before pressing the eject (⏏) button.

⑱ **SOUND EQ switch (PORTABLE/OFF/CAR)**
⑲ **CD•DECK SYNCHRO recording button (CD SYNCHRO)**
⑳ **DECK I operation buttons**
◀ : Reverse playback
▶ : Forward playback
◀◀/MS: Fast reverse/music search
■ : Stop
▶▶/MS: Fast forward/music search

㉑ **Recording level control (REC LEVEL)**
㉓ **DECK II operation buttons**
◀ : Reverse playback
▶ : Forward playback
◀◀/MS: Fast reverse/music search
■ : Stop
▶▶/MS: Fast forward/music search
O : Recording mute
❚❚ : Pause
● : Recording

㉔ **Headphones jack (PHONES)**
㉕ **DECK II AUTO BLE button**

12. SPECIFICATIONS

System ..... 4 track, 2-channel stereo
Heads ..... "Hard Permalloy" recording/playback head × 1
"Hard Permalloy" playback head × 1
"Ferrite" head × 1
Motor ..... DC servo motor × 2
Wow and Flutter ..... No more than 0.09% (WRMS)
No more than ±0.19% (DIN)
Fast Winding Time ..... Approximately 120 seconds (C-60 tape)

Frequency Response
−20 dB recording:
TYPE IV (Metal) tape ..... 25 to 16,500 Hz
TYPE II (Chrome) tape ..... 25 to 16,000 Hz
TYPE I (Normal) tape ..... 25 to 16,000 Hz
Signal-to-Noise Ratio
Dolby NR OFF ..... More than 57 dB
Noise Reduction Effect
Dolby B-type NR ON ..... More than 10 dB (at 5 kHz)
Dolby C-type NR ON ..... More than 19 dB (at 5 kHz)
Harmonic Distortion ..... No more than 0.8% (at −4 dB: 160 nwb/m)
Input (Sensitivity)
LINE (INPUT) ..... 100 mV (Input impedance 38 kΩ)
Output (Reference level)
LINE (OUTPUT) ..... 0.5 V (Output impedance 3.2 kΩ)
Headphone ..... 0.63 mW (Load impedance 8 Ω)

Subfunctions

- AUTO BLE tuning system (DECK II only)
- DOLBY HX PRO recording function (DECK II only)
- DOLBY B/C types NR
- Music search over ±15 selections
- Synchronized copy start
- High-speed and normal-speed copy (DECK I→DECK II)
- Relay playback/blank skip
- CD•DECK SYNCHRO recording capability
- Peak level meter with peak-hold function
- Automatic space recording mute
- Automatic tape selector
- SR System remote control available
- TIMER Recording
- TIMER Playback (Automatic relay on)
- 2-mode electronic 4-digit twin tape counter
- Headphone jack
- SOUND EQ function

Miscellaneous

Power Requirements
U.S., Canadian models ..... AC 120V, 60 Hz
U.K. model ..... AC 230−240 Volts~, 50/60 Hz
Multi-voltage model ..... AC 110V/120V−127V/220V/240V (switchable), 50/60 Hz

Power Consumption 17W
Dimensions
U.K. and multivoltage models
..... 420(W) × 135(H) × 250(D) mm
U.S. and Canadian models ..... 420(W) × 130(H) × 250(D) mm
16-9/16(W) × 5(H) × 9-13/16(D) in.
Weight (without package) ..... 4.5 kg (9 lb 15 oz.)

Accessories

Operating instructions 1
Connection cord with pin plugs 2
SR Remote control cord 1
CD•DECK SYNCHRO control cord 1

NOTE:
Specifications and design subject to possible modifications without notice, due to improvements.